GUSTO LAVA ROCK GAS CHAR-BROILERS

Models AMLB24, AMLB36, & AMLB48

Gusto Lava Rock Gas Char-Broilers

Features & Benefits:

Gusto Lava Rock Gas Char-Broilers are designed for the most demanding foodservice applications. Gusto char-broilers deliver maximum performance and provide years of operation.

Available in 24", 36" and 48" widths to fit many foodservice operation's space requirements.

Designed with high performance 40,000 BTU H-style cast iron burners every 12" of width. Cast iron burners provide excellent broiling performance, better heat distribution and maximum sectional control.

Heavy-duty cast iron grates can be individually positioned (flat or slanted) to accommodate a variety of broiling needs. Plus, our grates are reversible with a thin side for searing and a thick side for more delicate menu items.

Natural lava rock brickettes provide superior heat distribution and vaporize drippings.

Stainless steel, 2-3/4" high tapered splash guard provides maximum protection against grease and spills.

Cool to the touch stainless steel bull nose front provides knob protection and comfortable work zone.

Large capacity stainless steel water pan for easy clean up.

Gas convertible in the field with conversion kit supplied with each char-broiler. Units are shipped Natural Gas.

Heavy-duty 4 " adjustable legs to match the height of other Gusto equipment in your line.

Applications:

Gusto Lava Rock Gas Char-Broilers are designed for high volume and reliability. Whether it's steak, chicken, hamburger, shish kabobs or other menu items; Gusto char-broilers will fulfill your menu requirements.

Quality Construction:

Gusto line of Lava Rock Char-Broilers feature a stainless steel cool to the touch front panel, bull nose, drip pan, splash guard, and grease trough. All Char-Broilers have a heavy-duty polycarbonate graphic panel. The Double wall aluminized steel side panels with cast iron burners every 12", adjustable control valves and standing pilot are standard. Stainless Steel radiants provide maximum heat transfer and durability. Cooking surface consists of heavy duty, cast iron grates, which are adjustable to flat or slanted positions. Can be converted to lava rock style in the field.

Warranty:

Gusto Lava Rock Char-Broilers are covered by Star Manufacturing's one year parts and labor warranty.

GAS-FIRED C UL US LISTED

CLASSIFIED UL EPH

G212/1052

GUSTO EQUIPMENT www.gustoequipment.com info@gustoequipment.com

WARRANTY/SERVICE: ph. 314.678.6303 fax 314.781.2714

GUSTO LAVA ROCK GAS CHAR-BROILERS

Models AMLB24, AMLB36, & AMLB48

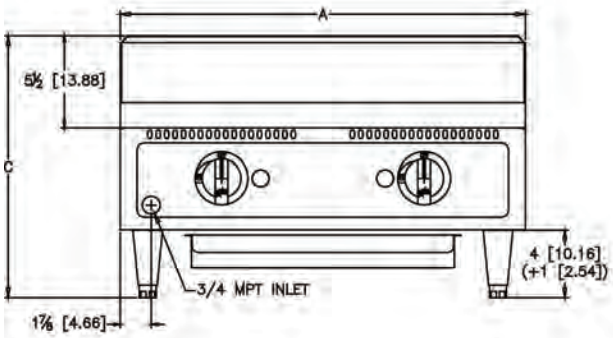

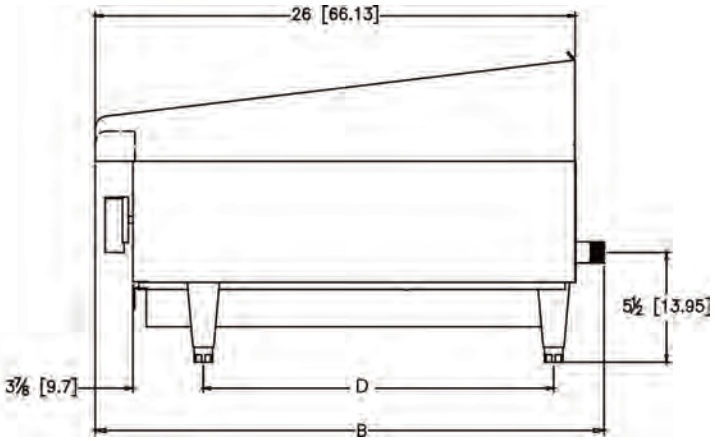

Specifications

Model No.	A width inches/cm	B depth inches/cm	C height inches/cm	D leg width inches/cm	No. Controls	BTUs	Grid Area	Approximate Weight installed lbs/kg	Approximate Weight shipping lbs/kg
AMLB24	24/61	29/65.4	15 $\frac{1}{2}$ /39.4	20 $\frac{3}{4}$ /52.71	2	*80,000	480 sq. in. 3097 sq. cm.	153/69.5	186/84.4
AMLB36	36/91.4	29/65.4	15 $\frac{1}{2}$ /39.4	32 $\frac{3}{4}$ /83.19	3	*120,000	720 sq. in. 4645 sq. cm.	192/87.2	230/104.4
AMLB48	48/121.9	29/65.4	15 $\frac{1}{2}$ /39.4	44 $\frac{3}{4}$ /113.67	4	*160,000	960 sq. in. 6194 sq. cm.	299/135.7	350/158.9

*Units operate on Natural or Propane Gas - On propane gas 35,000 BTU/HR for every 12” (30.5cm) width

Accessories

Model No.	Description	Weight Shipping lbs/kg
LR-SM8	Replacement Lava Rock (One 5 lb. bag needed per every 12” width)	5/2.27

Typical Specifications

Gas char-broilers are constructed with stainless steel front panel with black polycarbonate trim and double wall aluminized steel side panels. Unit have 40,000 BTU (35,000 BTU on propane gas) cast iron burner for every 12" (30.5 cm) of width and are controlled by an adjustable valve. Two stainless steel radiants per burner are provided. Cooking surface is a heavy duty cast iron grate type that is adjustable in height. A stainless steel water pan is provided. Control knobs are protected by a stainless steel bull nose front. A standing pilot is provided.

Char-broilers are supplied with 4" (10.2 cm) high die cast nickel plated legs that have a 1-3/8" (3.5 cm) adjustment. Gas connection is 3/4" N.P.T. male and a convertible pressure regulator is provided. Unites are UL Gas Certified for U.S. and Canada. UL sanitation approved.

Due to periodic changes in designs, methods, procedures, policies and regulations, the specifications contained in this sheet are subject to change without notice. While Star Manufacturing exercises good faith efforts to provide information that is accurate, we are not responsible for errors or omissions in information provided or conclusions reached as a result of using the specifications. By using the information provided, the user assumes all risks in connection with such use.

GUSTO EQUIPMENT **www.gustoequipment.com** **info@gustoequipment.com**

WARRANTY/SERVICE: ph. 314.678.6303 fax 314.781.2714

072012

GUSTO EQUIPMENT

Gusto Lava Rock Gas Char-Broilers