Project _____ Item # _____ Quantity _____

GS30

GS30T

# GS30/GS30T Price Computing Scales

## Models

- ❑ GS30 - Price Computing Scale
- ❑ GS30T - Price Computing Scale with Display Tower

NTEP Approved
Meets NIST
Handbook 44 Criteria
Legal for Trade

## Standard Features

- Weighs from .01 lb. to 30 lbs.
- Built-in rechargeable battery or AC powered
- Adds multiple transactions
- Automatic entry tare
- Easy to read two-sided LCD display of weight, unit price and total price
- Removable stainless steel recessed platter
- Six-foot, 115 volt power cord and molded plug
- Automatic shut-off if not used

## Standard Warranty

- One-year parts and labor

## Optional Accessory

- Plastic scale scoop (10” diameter x 2.5” deep)

Approved By:_____

Date:_____


precisely.

GLOBE FOOD EQUIPMENT COMPANY

www.globeslicers.com

2153 Dryden Rd.
Dayton, OH 45439
Phone: 937-299-5493
Phone: 800-347-5423
Fax: 937-299-4147


GLOBE FOOD EQUIPMENT COMPANY

Price Computing Scales

GS30/GS30T

# Price Computing Scales GS30/GS30T

## Specifications

| | |
|---|---|
| Capacity: | 30 lbs. x .01 lb. |
| Platter Size: | 11.75” x 8.75” (29.8cm x 22.2cm) |
| Construction: | Durable ABS (white), Stainless Steel Platter |
| Display: | LCD, .63” High |
| Display Information: | Weight, Unit Price, Total Price |
| Power Requirements: | 115V, 60 Hz, 1 Ph., .1 Amps |
| Power Supply: | AC Built-in Rechargeable Lead Storage Battery |
| Operating Temperature: | 14°F to 140°F |
| Cord and Plug: | Attached 6 ft. Flexible 3 Wire Cord and Plug Fits Grounded Receptacle |
| Tare: | Automatic Entry |
| Dimensions: | GS30 - 12.2”W x 13.2”D x 4.7”H (31cm W x 33.5cm D x 11.9cm H)<br>GS30T - 12.2”W x 14.6”D x 15.8”H (31cm W x 37.1cm D x 40.1cm H) |
| Shipping Dimensions : | GS30 - 19”W x17”D x 9”H (48.3cm W x 43.2cm D x 22.9cm H)<br>GS30T - 20”W x17”D x 10”H (50.8cm W x 43.2cm D x 25.4cm H) |
| Zero: | Auto Zero Tracking on Power Up |
| Keypad: | Laminated Membrane, Audible Tone Feedback |
| Accumulator: | Adds Multiple Transactions |
| Weight: | GS30 - Net 10.5 lbs. (4.8 kgs.), Shipping 13.5 lbs. (6.1 kgs.)<br>GS30T - Net 12 lbs. (5.4 kgs.), Shipping 15.5 lbs. (7 kgs.) |

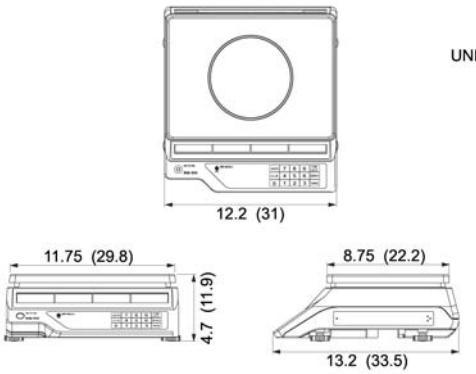


GS30

UNIT: INCHES (CM)

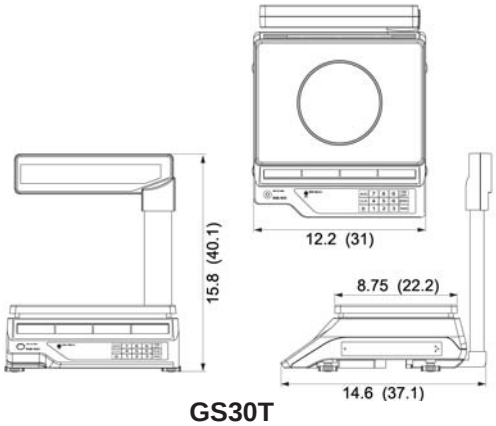


GS30T


**GLOBE FOOD EQUIPMENT COMPANY**

**www.globeslicers.com**

**2153 Dryden Rd.**
**Dayton, OH 45439**
**Phone: 937-299-5493**
**Phone: 800-347-5423**
**Fax: 937-299-4147**


*precisely.*


Printed in U.S.A. 03-2010


*Specifications are subject to change without notice.*