Project Name:_____ AIA#:_____ Model #:_____

Location:_____ SIS#:_____ Item #:_____ Quantity:_____

G-Series Medium Duty Automatic Slicer

Model

❒ G12A - 12" Diameter Knife Automatic Slicer

Intertek

2010

Enhanced Cleanability and Sanitation Features

Certified by NSF International - NSF/ANSI 8 - 2010 Standard

Quality Construction

- Hard chromed, special alloy hollow ground knife
- Anodized aluminum construction with seamless edges and radius corners
- Large food carriage and product receiving area
- Top mounted all metal knife sharpener
- Removable, easy-to-clean chute, slice deflector, knife cover & sharpener
- Metal bottom enclosure
- Permanently attached knife ring guard
- Moisture proof, easy-to-clean On/Off switch
- Sealed splash zones for added sanitation and protection of electronics
- Food fence (11" L)

Standard Features

- Manual or automatic slicer operation
- Automatic chute speed of 40 strokes per minute
- 0 to 1/2" slice thickness
- Powerful 1/2 HP knife motor
- Independent chute motor
- Motor overload protection with manual reset
- Oversized positive traction grooved belt drive
- Knife cover interlock
- Ergonomically designed, dual purpose handle
- Smooth stainless steel ball bearing chute slide
- 35° angled food chute
- No voltage release relay system
- Power indicator light

Warranty

- One-year parts and labor

Optional Warranty Extension

❒ Additional one-year warranty on parts and labor inside the continental U.S.

Optional Accessories

❒ A420VH - Vegetable Hopper

❒ CB - Cleaning Brush

GLOBE FOOD EQUIPMENT COMPANY
2153 Dryden Rd., Dayton, OH 45439
Phone: 937-299-5493 Fax: 937-299-4147
800-347-5423
www.globeslicers.com

Approved By: _____

Date: _____

GLOBE FOOD EQUIPMENT COMPANY

Medium Duty Automatic Slicer

G12A

Medium Duty Automatic Slicer G12A

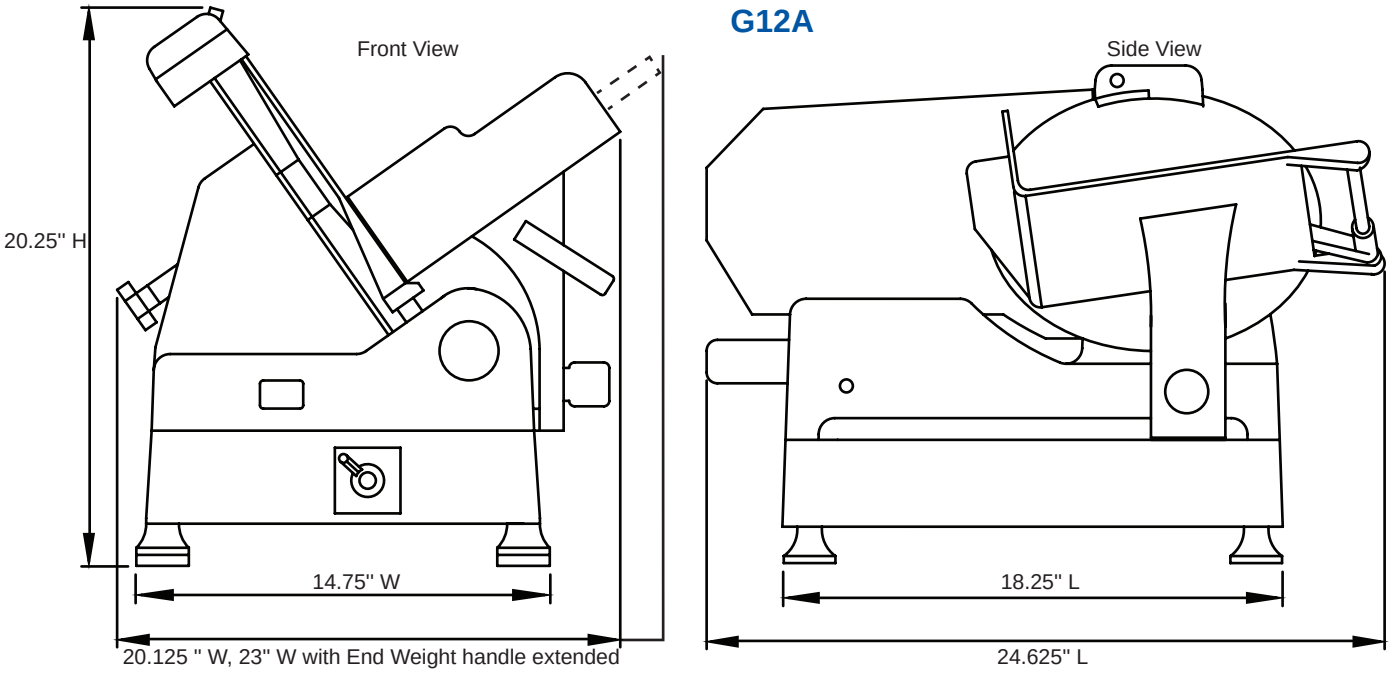

SPECIFICATIONS

Model	Auto or Manual	Motor	Volts	Amps	Drive Type	Slicing Volume per Day	Cheese Slicing	Blade Diameter	Max Slice	Cutting Capacity D (Diameter)	Cutting Capacity W (Width)	Cutting Capacity H (Height)
G12A	Both	1/2 HP	115-60-1	3	Belt	2.5 Hours	0 100% Time	12" (30.48 cm)	1/2" (1.27 cm)	8.75" (22.2 cm)	10" (25.4 cm)	8.25" (21 cm)

Cord & Plug: Attached 6 foot flexible 3-wire cord with molded plug fits a grounded receptacle. NEMA 5-15

STANDARD FEATURES:

Finish: Stain resistant, heavy-gauge, anodized aluminum finish is easy to clean.

Motor: 1/2 HP, Powerful fan cooled motor and permanently lubricated ball bearings ensure quiet operation. Thermal overload protection included.

Knife: 12" Hard chromed, special alloy hollow ground knife lasts longer and sharpens easily.

Manual Reset Button: Motor overload protection allows the operator to reset the slicer manually.

Top Mounted Sharpener: All metal construction and top mounted for easy access. Two stone, dual action design allows quick return to a razor sharp edge. Removable for cleaning.

On/Off Controls: Separate On/Off push buttons are moisture protected and sanitation sealed.

Automatic Chute Drive: Chute travels at 40 strokes per minute utilizing a separate motor and linkage drive system. Chute can be quickly engaged or disengaged for manual operation with the auto engage lever located on the front of the slicer.

Ball Bearing Chute Slide System: Ball bearing system ensures smooth and easy movement of the food chute assembly.

Knife Hub: Knife hub bearings, belt and motor are fully enclosed, protecting them from moisture.

Knife Cover Interlock: Slicer will not operate with the knife cover removed.

Knife Ring Guard: Permanently mounted knife ring guard protects the non-slicing portion of the knife. Slicer table protects leading edge of the knife when completely closed.

Table Rod: Separate table support rod is protected by the table casting and cover.

Bottom Enclosure: Components are safeguarded by a cover, protecting them from food and other debris.

No Volt Release Relay: Prevents inadvertent activation of the slicer in the event of power interruption.

Slice Deflector: Deflector is securely fastened to the slicer; simple to remove without tools and easy to clean.

Rubber Feet: Supplied with nonslip rubber feet.

DIMENSIONS & SHIPPING INFORMATION

Freight Class 85

Carton reinforced for shipping. The weight and dimensions of reinforced carton are included below and may vary from shipment to shipment.

Model	Foot Print	Overall Dimensions	Net Weight	Shipping Dimensions	Shipping Weight
G12A	18.25" D x 14.75" W (37.5 cm x 46.4 cm)	24.625" L x 23" W x 20.25" H (62.5 cm x 58.4 cm x 51.4 cm)	81.2 lbs. (36.8 kg)	25" L x 28" W x 32" H (64 cm x 71 cm x 81 cm)	88 lbs. (40 kg)

GLOBE FOOD EQUIPMENT COMPANY

www.globeslicers.com

2153 Dryden Rd.
Dayton, OH 45439
Phone: 937-299-5493
Phone: 800-347-5423
Fax: 937-299-4147

Printed in U.S.A. 02-2013

Ver. 2. 0130 Rev. 0 GFE 0113

Specifications are subject to change without notice.