Project Name:_____ AIA#:_____ Model #:_____

Location:_____ SIS#:_____ Item #:_____ Quantity:____

C-Series Compact Manual Slicer

Globe *Chefmate*™ Model:

❒ C9 - 9" Diameter Knife Manual Slicer

Intertek 2010

Enhanced Cleanability and Sanitation Features

Certified by NSF International - NSF/ANSI 8 - 2010 Standard

Quality Construction

- Anodized aluminum construction with seamless edges and radius corners
- Lightweight and compact Italian space-saving design
- Hard chromed, special alloy hollow ground knife
- Top mounted, all metal knife sharpener
- Removable, easy-to-clean chute, slice deflector, knife cover, and sharpener
- Metal bottom enclosure
- Moisture proof, easy-to-clean On/Off switch
- Sealed splash zones for added sanitation and protection of electronics

Standard Features

- 0 to 9/16" slice thickness
- 1/4 HP knife motor
- Motor overload protection with manual reset
- Oversized positive traction grooved belt drive
- Smooth stainless steel ball bearing chute slide
- Angled gravity feed chute
- Ergonomically designed, dual purpose handle
- Power indicator light

WARRANTY:

- One-year parts and labor

Optional Warranty Extension

❒ Additional one-year warranty on parts and labor inside the continental U.S.

Optional Accessories

❒ SC-SMALL - Slicer Cover

❒ CB - Cleaning Brush

GLOBE FOOD EQUIPMENT COMPANY
2153 Dryden Rd., Dayton, OH 45439
Phone: 937-299-5493 Fax: 937-299-4147
800-347-5423
www.globeslicers.com

Approved By: _____

Date: _____

C9

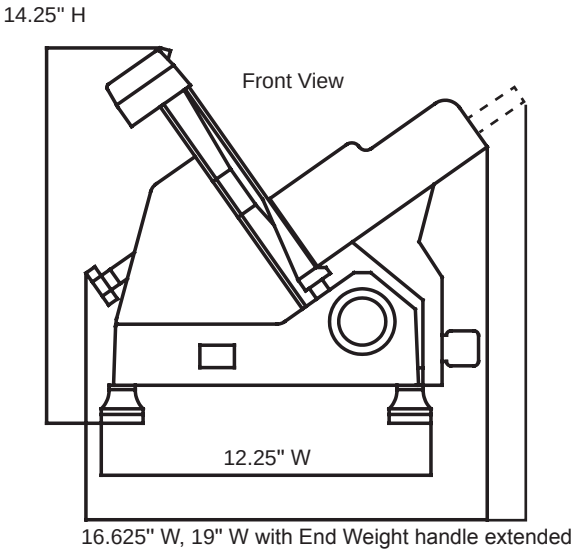

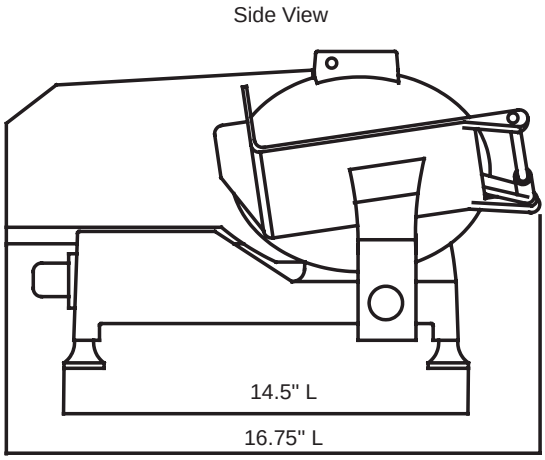

SPECIFICATIONS

Model	Auto or Manual	Motor	Volts	Amps	Drive Type	Slicing Volume per Day	Cheese Slicing	Blade Diameter	Max Slice	Product Cutting Capacity D (Diameter)	W (Width)	H (Height)
C9	Manual	1/4 HP	115-60-1	2	Belt	< 30 minutes	Not Recommended 0 100% Time	9" (22.86 cm)	9/16" (1.43 cm)	6.25" (15.88 cm)	7.25" (18.42 cm)	6.5" (16.51 cm)

Cord & Plug: Attached 5.5 foot flexible 3-wire cord with molded plug fits a grounded receptacle. NEMA 5-15

STANDARD FEATURES

Finish: Stain resistant, heavy-gauge, ***anodized aluminum finish*** is easy-to-clean.

Motor: 1/4 HP, Powerful fan cooled motor and permanently lubricated ball bearings ensure quiet operation. Thermal overload protection included.

Knife: 9" Hard chromed, special alloy hollow ground knife lasts longer and sharpens easily.

Manual Reset Button: Motor overload protection allows the operator to reset the slicer manually.

Top Mounted Sharpener: All metal construction and top mounted for easy access. Two stone, dual action design allows quick return to a razor sharp edge. Removable for cleaning.

On/Off Controls: Separate On/Off push buttons are moisture protected and sanitation sealed.

Ball Bearing Chute Slide System: Ball bearing system ensures smooth and easy movement of the food chute assembly.

Knife Hub: Knife hub bearings, belt and motor are fully enclosed, protecting them from moisture.

Knife Cover: Knife cover is designed to fit on the slicer only one way to ensure accurate placement every time.

Table Rod: Separate table support rod is protected by the table casting and cover.

Bottom Enclosure: Components are safeguarded by a cover, protecting them from food and other debris.

Slice Deflector: Deflector is securely fastened to the slicer; simple to remove without tools and easy to clean.

Rubber Feet: Supplied with nonslip rubber feet.

DIMENSIONS & SHIPPING INFORMATION

Freight Class 85

Carton reinforced for shipping. The weight and dimensions of reinforced carton are included below and may vary from shipment to shipment.

Model	Foot Print	Overall Dimensions	Net Weight	Shipping Dimensions	Shipping Weight
C9	14.5" D x 12.25" W (36.8 cm x 31.1 cm)	16.75" L x 19" W x 14.25" H (42.5 cm x 48.3 cm x 36.2 cm)	29.6 lbs. (13.4 kg)	19" L x 16" W x 15" H (48 cm x 41 cm x 38 cm)	33 lbs. (15 kg)

GLOBE FOOD EQUIPMENT COMPANY

www.globeslicers.com

2153 Dryden Rd.
Dayton, OH 45439
Phone: 937-299-5493
Phone: 800-347-5423
Fax: 937-299-4147