GARLAND®

Item #:_____
Model: MCO-ES-10/20-S, MCO-ED-10/20-S
Product Name: Master Electric Convection Oven

Model MCO-ES-10-S

Specification:

Garland Master full-size Standard Depth Single or Double (MCO-ES-10/20-S) or Deep Depth Single or Double (MCO-ED-10/20-S) electric convection oven. 10.4 kW/ cavity, 3/4 HP fan motor with two speed fan control. Master 200 Solid State control. Porcelain enameled oven interior with coved corners, Six (6) oven racks and 13-position rack guides. Interior measures 29"(736mm) W x 24" (610mm) H x 24" (610mm) D for standard depth and 29" (736mm) W x 24" (610mm) H x 28" (610mm) D for deep depth. Stainless steel front, sides, top and legs. 60/40 dependent door design with double pane thermal window in both doors and interior lighting. Specify voltage and phase. UL, CUL and NSF Listed. Ovens with optional 400 series controllers are CE approved.

Standard Features:

- Master 200 Solid State Control with 150° F (66°C) to 500°F (250°C) temperature range and electromechanical timer
- 2-speed fan control (high & low) w/3/4HP fan motor
- Total of 10.4 kW loading per oven cavity
- Stainless steel front, sides, top, and legs
- 60/40 dependent door design with double pane thermal window in both doors and interior lighting
- Full Length, stainless steel positive door closure
- Patented "Safety Door System"
- Porcelain enameled oven interior with coved corners
- 24" cooking cavity height w/6 chrome plated oven racks on 13-position rack guides
- Double deck models available.
- 1 year limited parts & labor warranty (USA & Canada only)
- 5 year limited door warranty, excluding window (USA & Canada only)

Optional Features:

- ❑ Manufactured as U.S. Range Brand – No Charge, specify
- ❑ Solid State, Digital Controls W/ Cook'N Hold, Pulse Fan, Auto Setback, and Auto Cool Down; CE Approved
  - ❑ Master 450 as above
  - ❑ Master 455 (as above plus) Core Probe
  - ❑ Master 475 (as above plus) Programmable Product Keys
- ❑ Window in left hand door w/interior lighting
- ❑ Stainless steel solid doors
- ❑ Stainless steel oven interior
- ❑ Extra oven racks
- ❑ 4 swivel casters w/front brakes
- ❑ Low profile casters w/front brakes (double ovens only)
- ❑ Open base with rack guides & shelf (stainless steel)
- ❑ Back enclosure (stainless steel)
- ❑ 460 volt, 3 phase
- ❑ 50 cycle components

NOTE: Ovens suppled with casters must be installed with an approved restraining device.

Garland Commercial Industries, Inc.
185 East South Street
Freeland, Pennsylvania 18224
Phone: (570) 636-1000
Fax: (570) 636-3903

Garland Commercial Ranges Ltd
1177 Kamato Road, Mississauga, Ontario
L4W 1X4 CANADA
Phone: 905-624-0260
Fax: 905-624-5669

Enodis UK LTD
Swallowfield Way, Hayes, Middlesex
UB3 1DQ ENGLAND
Telephone: 081-561-0433
Fax: 081-848-0041

GARLAND ELECTRIC Master Electric Convection Oven MCO-ES-10/20-S, MCO-ED-10/20-S

GARLAND®

Item #:_____
Model: MCO-ES-10/20-S, MCO-ED-10/20-S
Product Name: Master Electric Convection Oven

Model	Interior Demension (per oven)			Exterior Dimension			Ship Wt./Size	
	W:In(mm)	H:In(mm)	D:In(mm)	W:In(mm)	H:In(mm) **	D:In(mm)	lLbs./Kg	Cu Ft
MCO-ES-10-S	29(436)	24(610)	24(610)	38(965)	57-1/2(1416)	41-1/4(1048)	460/210	42
MCO-ES-20-S	29(436)	24(610)	24(610)	38(965)	70-1/2(1791)	41-1/4(1048)	920/415	84
MCO-ED-10-S	29(436)	24(610)	28(711)	38(965)	57-1/2(1416)	44-1/2(1130)	530/240	42
MCO-ED-20-S	29(436)	24(610)	28(711)	38(965)	70-1/2(1791)	44-1/2(1130)	1060/480	84

** Height with or without standard casters. Height with low profile casters (double deck) is 68-1/2" (1740mm).

Model*	Total kW	Nominal Amperes Per Line (includes 3/4 HP fan motor)										
		208v/1Ph	240V/1Ph	208V/3Ph			240V/3Ph			460V/3Ph		
				X	Y	Z	X	Y	Z	X	Y	Z
MCO-ES-10-S	10.4	50	43	30	30	28	26	26	24	14	14	13
MCO-ED-10-S	10.4	50	43	30	30	38	26	26	24	14	14	13

*NOTE: Double deck models with suffix - "20-S" are provided with individual power supply connections

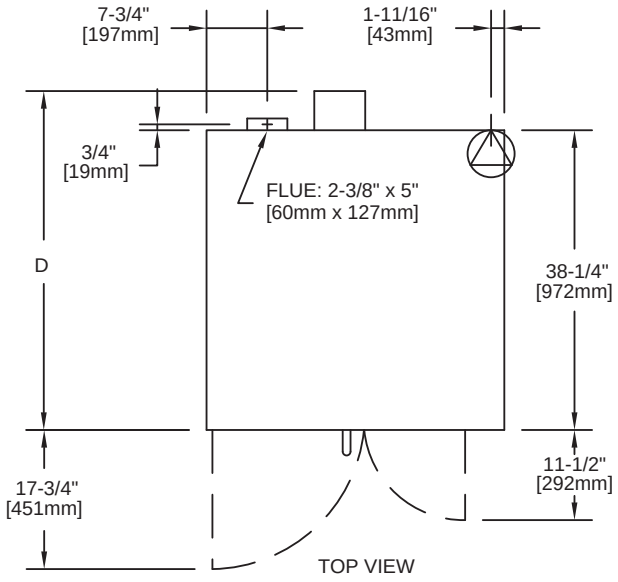

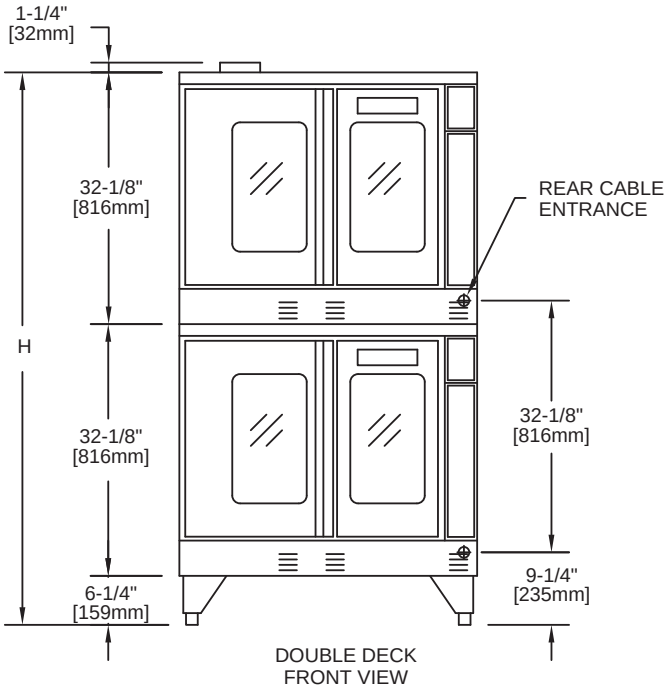

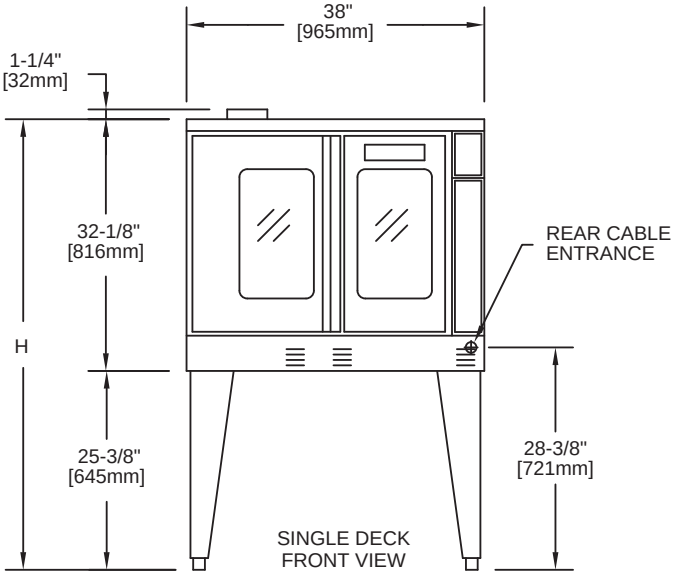

Installation Notes:			
Non-Conbustible and Combustible Wall Clearances			
Sides	1" (25mm)	Back	6" (152mm)
Entry Clearance			
Crated		Uncrated	
44-1/2" (1130mm)		32-1/2" (862mm)	

Electrical specifications include motor requirements. 3/4 HP, 2 speed motor: 1725/1140 rpm, (60Hz); or 1440/950 rpm (50Hz). Please specify electrical characteristics when ordering

Continuous product improvement is a Garland policy. Specifications and design are subject to change without notice

Printed in USA Form #MCO-ES/ED-10/20-S (12/06)