Garland

G Series 36" Gas Restaurant Range

Item: _____

Quantity: _____

Project: _____

Approval: _____

Date: _____

G Series 36" Gas Restaurant Range

Models:

- ☐ G36-6R
- ☐ G36-6S
- ☐ G36-4G12R
- ☐ G36-4G12S
- ☐ G36-2G24R
- ☐ G36-2G24S
- ☐ G36-G36R
- ☐ G36-G36S

Model G36-6R

NOTE: Ranges supplied with casters must be installed with an approved restraining device.

Standard Features:

- Large 27" (686mm) work top surface
- Stainless steel front and sides
- Stainless steel 5" (127mm) plate rail
- Stainless steel backguard, w/removable stainless steel shelf
- 12" (305mm) section stamped drip trays w/ dimpled bottom
- 6" (152mm) adj. stainless steel legs
- Large easy-to-use control knobs
- Gas regulator

Standard on Applicable Models:

- Cabinet base in lieu of oven, suffix S
- Ergonomic split cast iron top ring grates
- 33,000 Btuh/9.67 kW 2 piece cast iron Starfire- Pro open top burner
- 5/8" (15mm) thick steel griddle plate w/manual hi/lo valve control, 23" (584mm) working depth surface, Standard on right, optional on left
- 4-1/4" (108mm) wide grease trough
- 20,000 Btuh/5.86 kW cast iron "H" style griddle burner per 12"(305mm) width of griddle
- 38,000 Btuh/ 11.13 kW cast iron "H" style oven burner
- Snap action modulating oven thermostat low to 500° F
- Large porcelain oven interior, fits standard sheet pans in both directions for standard ovens
- Nickel plated oven rack and 3-position removable oven rack guide
- Strong, keep-cool oven door handle
- Convection oven w/3 nickle plated oven racks and removable rack guides in lieu of standard oven w/ 1/3HP 120v 60 Hz single phase fan motor; change suffix R to C

Optional Features:

- ☐ Convection oven motor 240v 50/60HZ single phase
- ☐ Snap action modulating griddle control 175° to 425° F
- ☐ Grooved griddle in 1/2 or full plate section widths
- ☐ Hot top 12" (305mm) plate in lieu of two open burners, manual valve controlled w/20,000 Btuh/5 86 kW cast iron "H" burner standard on left side
- ☐ Low profile 6" (152mm) backguard stainless steel front and sides
- ☐ Stainless steel back for high shelf, low profile backguard or range
- ☐ Additional oven racks
- ☐ 6" (152mm) swivel casters (4), w/front locking, leveling or non-leveling (specify)
- ☐ Flanged deck mount legs
- ☐ Stainless steel door for storage base models
- ☐ Intermediate stainless steel shelf for storage base models
- ☐ Celsius temperature dials

Specifications:

Gas restaurant series range with large capacity (standard) oven. 35 7/16" (900mm) wide, 27" (686mm) deep work top surfaces. Stainless steel front, sides and 5" wide front rail. 6" (152mm) legs with adjustable feet. Six Starfire-Pro 2 piece, 33,000 Btuh/ 9.67 kW (natural gas), cast open burners set in split cast iron ergonomic grates. Griddle or optional hot-top with cast iron "H" style burners, 20,000 Btuh/5.86 kW (natural gas), in lieu of open burners. One piece oven with porcelain interior and heavy duty, "keep cool" door handle. Heavy cast iron "H" oven burner rated 38,000 Btuh/11.13 kW (natural gas) Oven controlled by even bake, fast recovery snap action modulating oven thermostat. Available with convection oven or storage base in lieu of standard oven.

Garland Commercial Industries, LLC
185 East South Street
Freeland, PA 18224
Phone: (570) 636-1000
Fax: (570) 636-3903

Garland Commercial Ranges Ltd
1177 Kamato Road,
Mississauga, Ontario
L4W 1X4 CANADA
Phone: 905-624-0260
Fax: 905-624-5669

Enodis UK LTD
Swallowfield Way,
Hayes, Middlesex
UB3 1DQ ENGLAND
Telephone: 081-561-0433
Fax: 081-848-0041

Enodis

G Series 36" Gas Restaurant Range

Model Number	Description	Total BTU/Hr Natural	Shipping Information		
			Lbs.	Kg	Cu Ft [2]
G36-6R[1]	Six Open Burners w/26" Oven	236,000	430	195	37
G36-6S	Six Open Burners w/Storage Base	198,000	310	141	37
G36-4G12R[1]	12" Griddle, Four Open Burners w/26" Oven	190,000	460	209	37
G36-4G12S	12" Griddle, Four Open Burners w/Storage Base	152,000	340	154	37
G36-2G24R[1]	24" Griddle, Two Open Burners w/26" Oven	144,000	495	225	37
G36-2G24S	24" Griddle, Two Open Burners w/Storage Base	106,000	375	170	37
G36-G36R[1]	36" Griddle w/26" Oven	98,000	530	240	37
G36-G36S	36" Griddle w/Storage Base	60,000	410	186	37

[1] Available with convection oven change R to C [2] Ranges with Convention Ovens "C" are 57 Cu Ft

Width In (mm)	Depth[3] In (mm)	Height w/shelf In (mm)	Oven Interior-in (mm)			Combustible Wall Clearance-In (mm)		Entry Clearances In (mm)		Manifold Operating Pressure	
			Height	Depth[4]	Width	Sides	Rear	Crated	Uncrated	Natural	Propane
35-7/16 (900)	34-1/2 (876)	57 (1448)	13 (330)	26 (660)	26-1/4 (667)	12 (305)	6 (152)	37 (940)	36-1/2 (927)	4.5" WC 11 mbar	10.0" WC 25 mbar

[3] Convection oven base models add 3 7/8" (98mm) to the depth of the unit. [4] Convection oven depth 22" (559mm)

Note: Installation clearance reductions are applicable only where local codes permit.

Burner Ratings (BTU/Hr/kW)			
Gas	Open	Griddle/Hot Top	Oven
Natural	33,000/9.67	20,000/5.86	38,000/11.13
Propane	26,000/7.61	19,000/5.56	32,000/9.38

Convection ovens with 120V, 60 Hz, 1 phase, 3.4 amps motors are supplied with 6'/1829mm cord and plug (NEMA 5-15P); 240V, 50/60 Hz, 1 phase motors are not supplied with cord and plug and must have direct connect.

Gas input ratings shown for installations up to 2000 ft.,(610m) above sea level. Please specify altitudes over 2000 ft.

This product is not approved for residential use.

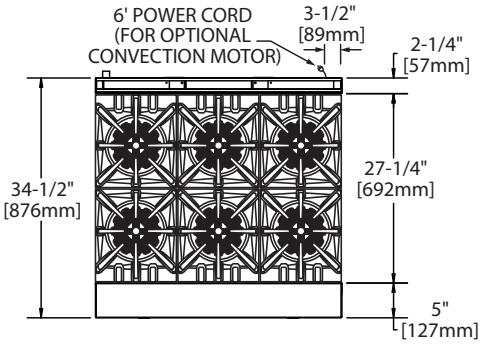

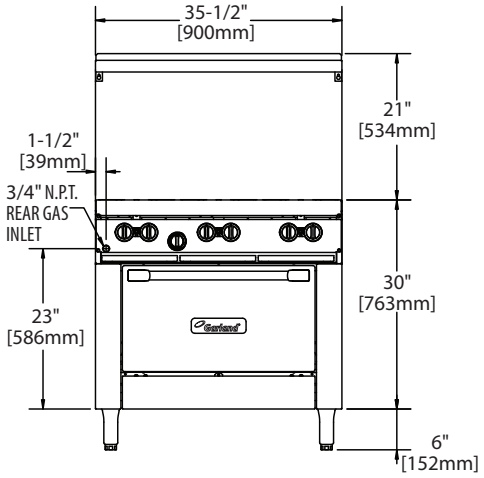

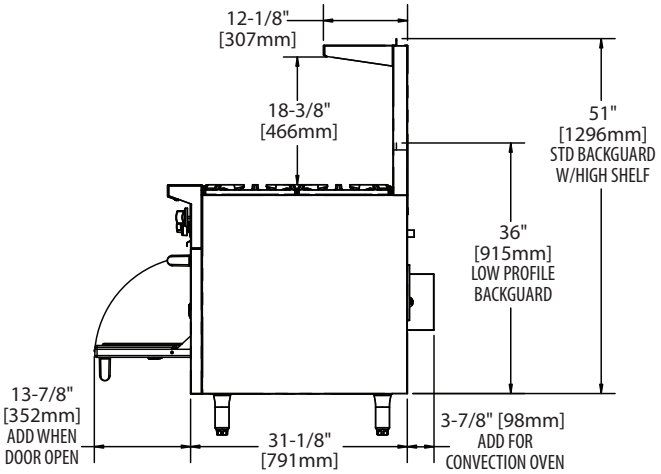

Form# 36 " G Series (03/27/08)

Garland Commercial Industries, LLC
185 East South Street
Freeland, PA 18224
Phone: (570) 636-1000
Fax: (570) 636-3903

Garland Commercial Ranges Ltd
1177 Kamato Road,
Mississauga, Ontario
L4W 1X4 CANADA
Phone: 905-624-0260
Fax: 905-624-5669

Enodis UK LTD
Swallowfield Way,
Hayes, Middlesex
UB3 1DQ ENGLAND
Telephone: 081-561-0433
Fax: 081-848-0041