Frymaster

MJ35 Gas Fryers

Project _____
Item _____
Quantity _____
CSI Section 11400 _____
Approval _____
Date _____

MJ35 Gas Fryers

Models

☐ MJ35 ☐ MJ35G ☐ MJ35E

Standard Features

MJ35

- Open-pot design is easy to clean
- 40-lb. (20-liter*) oil capacity
- 110,000 Btu/hr. (27,700 kcal) (32.2 kw)
- Frying area 12" x 15" x 4-1/4" (30.5 x 38.1 x 10.8 cm)
- Master Jet burner ensures even heat distribution
- Millivolt controller, no electric connection required
- Reliable, centerline, fast-action temperature probe
- Thermostat knob behind front panel
- Deep cold zone, 1-1/4" (3.2 cm) IPS ball-type drain valve
- Stainless steel frypot and door, enamel cabinet
- Two twin baskets
- 6" (15.2 cm) legs with 1" (2.5 cm) adjustment
- Gas connection -- see chart on back

MJ35G

- Thermostat knob on front panel

MJ35E

- Thermostat controller
- Signal lights, on-off switch

Options & Accessories

- ☐ Built-in filtration available on single frypot fryers including a spreader cabinet and on multiple frypot batteries -- 2 to 6 fryers can be batteried to right side of filter. Must upgrade to G and E models.
- ☐ CM3.5 controller, electronic timer controller, digital or analog controller (MJ35E only)
- ☐ Electronic ignition (must use one of the above controllers) (MJ35E only)
- ☐ Automatic basket lifts (MJ35G and E models only*)
- ☐ Piezo ignitor
- ☐ On/Off toggle switch (MJ35 only)
- ☐ Shortening melt cycle control (MJ35E)
- ☐ Spreader cabinet
- ☐ External Oil Discharge -- call Customer Service for availability
- ☐ Frypot cover
- ☐ Casters
- ☐ Fish plate
- ☐ Stainless steel cabinet

See Frymaster domestic price list for other available options and accessories.

*With count-down timer (MJ45G); with electronic timer controller (MJ45E)

Specifications

Unsurpassed in their versatility, proven worldwide performance, and low maintenance needs

The MJ35 gas fryers are unsurpassed in their versatility, controlled performance and low maintenance needs. Whether it is a single fryer or a fryer with a built-in filtration system, the MJ35 fryers offer options that accommodate a wide range of frying needs -- everything from French fries, pre-breaded products to specialty foods.

The Master Jet burner system distributes heat evenly around the frypot, generating a large heat-transfer area for efficient exchange and quick recovery. They have earned a legendary reputation for durability and reliability. The MJ burners require no burner cleaning or air shutter adjustment. The reliable centerline fast-action temperature probe assures accurate temperatures for efficient heat-up, cooking and recovery.

The large cold zone and forward sloping bottom help collect and remove sediment from the frypot to safeguard oil quality and support routine frypot cleaning. The standard front flush feature deflects oil out from the back of the frypot, moving sediment to the front drain valve for easy and thorough removal.

Built-in filtration is available with up to six fryers batteried together into a single system, or with single MJ35G and E model fryers and a spreader cabinet. The spreader can include an optional heat lamp and holding station. The holding station can use either cafeteria-style or scoop-type pan. The heat lamp and pans are integrated into the cabinet, making a complete warming station.

*Liter conversions are for solid shortening @70°F.

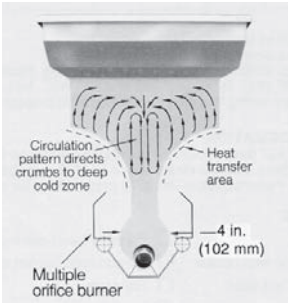

Unique frypot design with deep cold zone

8700 Line Avenue
Shreveport, LA 71106-6800
USA

Tel: 318-865-1711
Tel: 1-800-221-4583
Fax: 318-868-5987
E-mail: info@frymaster.com

www.frymaster.com

Bulletin No. 818-0008
Revised 10/29/12

Manitowoc

Ace Mart Restaurant Supply

MJ35 Gas Fryers

Model #_____
CSI Section 11400

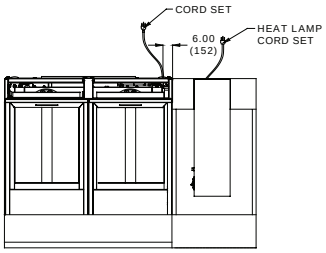

INCHES
(MM)

Frymaster Gas Line Requirements	
No. of Fryers	Gas Line Size (With or Without Filtration)
1	3/4″
2-3	One 1″
4-6	Two 1″

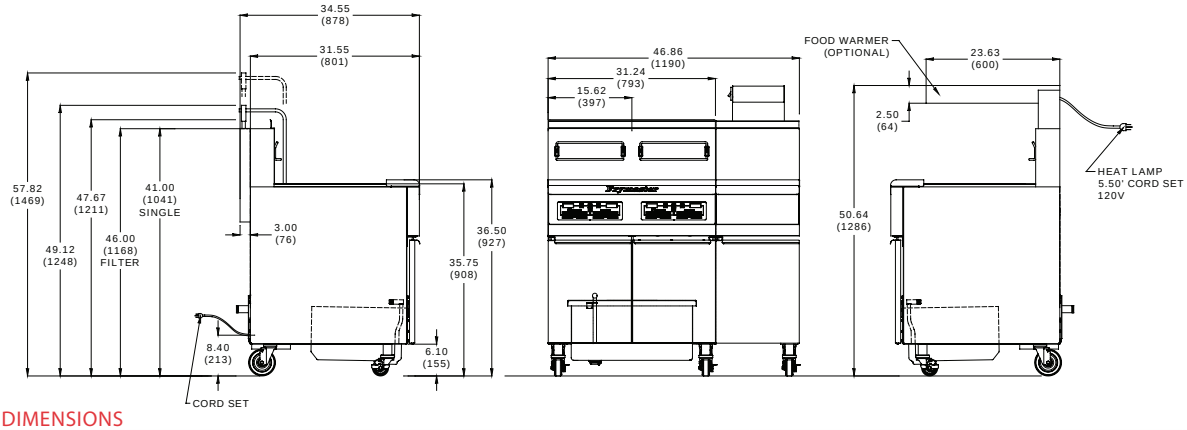

DIMENSIONS

MODEL	OIL CAPACITY	OVERALL SIZE (cm)			DRAIN HEIGHT	NET WEIGHT	SHIPPING INFORMATION					
		WIDTH	DEPTH	HEIGHT			WEIGHT	CLASS	CU. FT.	DIMENSIONS (cm)		
MJ35, MJ35G, MJ35E Without Basket Lifts	40 lbs. (20 liters)	15-5/8″ (40.0)	31-1/2″ (80.1)	41″ (104.1)	10-5/8″ (27.0 cm) with extension	145 lbs. (66 kg)	177 lbs. (80 kg)	85	19.47	**W** 22″ (56.0)	**D** 36″ (91.4)	**H** 42-1/2″ (108)
MJ35, MJ35G, MJ35E With Basket Lifts	40 lbs. (20 liters)	15-5/8″ (40.0)	34-1/2″ (87.6)	47-5/8″* (121.0)	10-5/8″ (27.0 cm) with extension	185 lbs. (84 kg)	233 lbs. (106 kg)	85	19.47	22″ (56.0)	36″ (91.4)	48″ (122)

*Height for units with filters -- see drawing for height of single non-filter units.

POWER REQUIREMENTS, PER FRYPOT

MODEL NO.	BASIC DOMESTIC OPTIONS		
	CONTROLLER	FILTER	BASKET LIFTS
MJ35/MJ35G (without filter)	N/A (millivolt controller)		
MJ35G/MJ35E/MJ5EM	120V 1 A 220V 1 A	120V 8 A 220V 5 A	120V 3 A 220V 2 A
	BASIC EXPORT/CE OPTIONS		
MJ35/MJ35G (without filter)	N/A (millivolt controller)		
MJ35G/MJ35E/MJ5EM	220V/250V 1 A	220V/250V 5 A	220V/250V 2 A

HOW TO SPECIFY

The following description will assist with ordering the features desired for this equipment:

MJ35 — 40-lb. performance, open-pot gas fryer with millivolt controls; centerline, fast-action temperature probe; thermostat knob behind front panel. Option for front panel knob placement.

MJ35G — 40-lb. performance, open-pot gas fryer with millivolt controls; centerline, fast-action temperature probe; thermostat knob on front panel.

MJ35E — 40-lb. performance, open-pot gas fryer with thermostat controller; centerline, fast-action temperature probe; signal lights and on-off switch.

SD — Stainless steel frypot and door -- enamel cabinet

SC — Stainless steel frypot, door and cabinet

NOTES

- 120VAC 5 ft. (1.5 m) grounded power cord provided for MJ35GBL and all MJ35E models.
- Gas supply line to fryers should be minimum 1/2″ for single fryers, minimum 1 in. for 2 or more fryers in battery. Recommended minimum store manifold pressure to be 6″ W.C. for natural gas and 11 in. W.C. for L.P. gas. Check plumbing codes for proper supply line sizing to attain burner manifold pressure of 4 in. W.C. natural or 9 in. W.C. L.P.

CLEARANCE INFORMATION

A minimum of 24 in. (61 cm) should be provided at the front of the unit for servicing and proper operation, and 6 in. (15.2 cm) between the sides and rear of the fryer to any combustible material. A minimum of 18 in. (45.7 cm) should be maintained between the flue outlet and the lower edge of the exhaust hood filters.

8700 Line Avenue
Shreveport, LA 71106-6800
USA

Tel: 318-865-1711
Tel: 1-800-221-4583
Fax: 318-868-5987
E-mail: info@frymaster.com

www.frymaster.com

Bulletin No. 818-0008
Revised 10/29/12

Litho in U.S.A. ©Frymaster, LLC

We reserve the right to change specifications appearing in this bulletin without incurring any obligation for equipment previously or subsequently sold.

Ace Mart Restaurant Supply