Dean

Super Runner Value Gas Fryers

Project _____

Item _____

Quantity _____

CSI Section 11400 _____

Approval _____

Date _____

Super Runner Value Gas Fryers

Models

☐ SR42G ☐ SR52G ☐ SR62G

SR62G
Shown with optional casters.

Standard Features

- Tube-type frypot design
- Oil capacity
  SR42G -- 43 lb. (21 liter)
  SR52G -- 50 lb. (25 liter)
  SR62G -- 75-lb. (37 liter)
- Btu/hr. input
  SR42G -- 105,000 (26,481 kcal) (30.8 kw) (3-tube)
  SR52G -- 120,000 (30,600 kcal) (35.2 kw) (4-tube)
  SR62G -- 150,000 (37,783 kcal) (44 kw) (5-tube)
- Frying area
  SR42G 14" x 14" x 3-7/8" (35 x 35 x 9.8 cm)
  SR52G 14" x 14" x 3-1/2" (35 x 35 x 8.5 cm)
  SR62G 18" x 18" x 3-3/4" (46 x 46 x 9.5 cm)
- Mechanical snap-action thermostat
- Millivolt control system - requires no electrical hookup
- Thermo-tube design
- Wide cold zone
- Stainless steel frypot, front, door, and backsplash/flue cover, aluminized sides
- Wire form basket hanger and two fry baskets
- 6" (15 cm) adjustable steel legs
- 3/4" (1.9 cm) NPT gas connection

Options & Accessories

☐ Stainless-steel sides
☐ Casters -- set of 4
☐ Natural and LP gas

Specifications

Basic Frying At Its Best -- Designed For All-Purpose Usage

Fry a wide variety of products with Dean's Super Runner fryers which easily accommodate items from French fries to main entree menu selections. The fryers are available in three oil capacities utilizing 43 lbs., 50 lbs. and 75 lbs. of oil.

Make the most of your energy dollars with Dean's exclusive Thermo-Tube design. The heating tubes provide a large oil contact surface. Flow-tube baffles control the transfer of heat into the oil. Dean's wide cold zone frypot protects oil integrity by trapping debris under the cooking area, preventing carbonization of particles and wasteful oil deterioration.

Dean's mechanical thermostat assures prompt recovery which reduces time lost between loads and requires no electrical hookup.

Dean's Super Runner gas fryers achieve dependability through simplicity of design, durable stainless steel baffles and rugged cast iron burners.

SR42 and SR62 Approved for Australia

5489 Campus Drive
Shreveport, LA 71129
USA

Tel: 318-865-1711
Tel: 1-800-221-4583
Fax: 318-868-5987
E-mail: info@dean.enodis.com

http://dean.enodis.com

Bulletin No. 830-0117
Revised 1/8/13

Litho in U.S.A. ©Frymaster

Manitowoc

Dean

Super Runner Value Gas Fryers

INCHES
(mm)

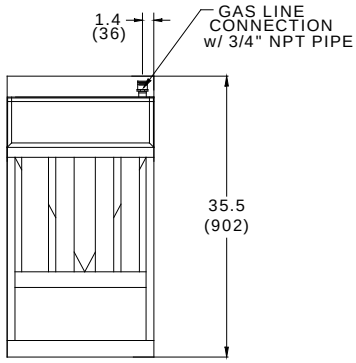

TOP VIEW

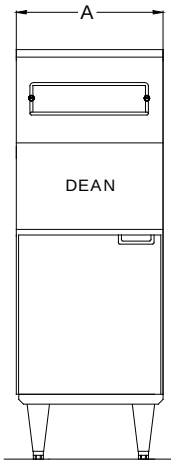

FRONT VIEW

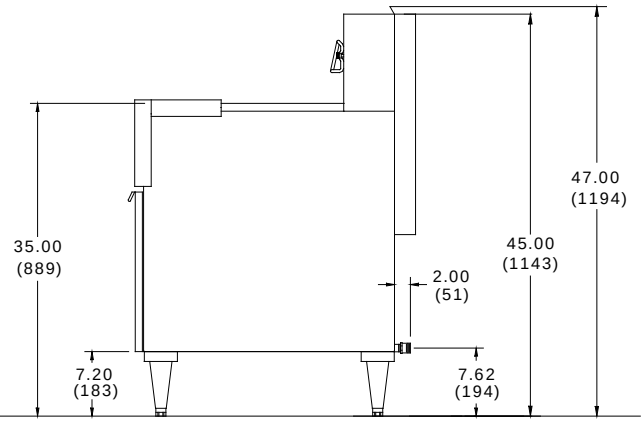

SIDE VIEW

DIMENSIONS

MODEL	OIL CAPACITY	OVERALL SIZE (cm)			DRAIN VALVE HEIGHT (cm)	NO. OF TUBES	APPROXIMATE SHIPPING DIMENSIONS					
		WIDTH	DEPTH	HEIGHT			WEIGHT	CLASS	CU. FT.	DIMENSIONS (cm)		
SR42G	43 lbs. (21 liter)	15-1/2″ (39.4)	29-1/4″ (74.3)	45″ (114.3)	18-3/8″ (46.7)	3	150 (68 kg)	85	22	**W** 20-1/2″ (52.1)	**D** 36″ (91.4)	**H** 48-1/2″ (123.2)
SR52G	50 lbs. (25 liter)	15-1/2″ (39.4)	29-1/4″ (74.3)	45″ (114.3)	17-1/2″ (44.5)	4	180 (82 kg)	85	22	20-1/2″ (52.1)	36″ (91.4)	48-1/2″ (123.2)
SR62G	75 lbs. (37 liter)	20″ (50.8)	35-1/2″ (90.2)	45″ (114.3)	19-3/4″ (50.1)	5	255 (116 kg)	85	22	20-1/2″ (52.1)	36″ (91.4)	48-1/2″ (123.2)

POWER REQUIREMENTS

MODEL	NATURAL OR LP GAS INPUT RATING	GAS CONNECTION	ELECTRICAL REQUIREMENT
SR42G	105,000 Btu/hr. (26,481 kcal) (30.8 kw)	3/4″ N.P.T. Regulator not required for manifold pressure. See note below.*	NONE
SR52G	120,000 Btu/hr. (30,600 kcal) (35 kw)		
SR62G	150,000 Btu/hr. (37,783 kcal/hr.) (44 kw)		

ORDERING DATA

Please specify:
- Natural or propane gas
- Altitude -- if above 2000 ft. (610 m)

NOTE:

DO NOT CURB MOUNT.

*SUPPLY PRESSURE: DO NOT EXCEED 14″W.C. or 1/2 PSI.

HOW TO SPECIFY

The following description will assist with ordering the features desired for this equipment:

SR42 43-lb (21-liter) tube-type gas fryer with millivolt controller, and mechanical snap-action thermostat

SR52 50-lb (25-liter) tube-type gas fryer with millivolt controller and mechanical snap-action thermostat

SR62 75-lb (37-liter) tube-type gas fryer with millivolt controller and mechanical snap-action thermostat

Model #_____
CSI Section 11400

5489 Campus Drive
Shreveport, LA 71129
USA

Tel: 318-865-1711
Tel: 1-800-221-4583
Fax: 318-868-5987
E-mail: info@dean.enodis.com

http://dean.enodis.com

Bulletin No. 830-0117
Revised 1/8/13

Litho in U.S.A. ©Frymaster

Manitowoc

We reserve the right to change specifications appearing in this bulletin without incurring any obligation for equipment previously or subsequently sold.
Check www.frymaster.com for updates.