Cleveland

BRAISING PANS /
TILTING SKILLETS

Project _____
Item _____
Quantity _____
FCSI Section _____
Approval _____
Date _____

"SPLASH PROOF"

ELECTRIC TABLE TYPE, ROUND,
15 GALLON (56 LITER)

MODEL: ☐ *SET-15*

Cleveland Standard Features

- High Efficiency Heating System with even heat distribution via Heating Elements cast into Aluminum, covering entire pan bottom
- Cooking Surface Guaranteed against warping
- Splash Proof
- Bead Blasted Cooking Surface resists sticking
- Adjustable, Thermostat Controlled Temperature from 175°F to 425°F
- Fast Heat-Up and Recovery Time
- Balanced Design Permits Easy Tilting; with left or right mounted Tilt Handle
- All Stainless Steel Construction for durability and easy cleaning
- Lift-Off Cover with Adjustable Vent
- Sanitary Base Mounting for Table Top Installation
- Standard 208 or 240 Volts, 60 Hz, 3 Phase, 3 Wire
- Self-Locking Marine Type Tilt Mechanism: Prevents accidental tilting
- Typical approvals include UL, CSA, CE and NSF

Options & Accessories

- ❒ Double or Single Pantry with Swing Spout (DPS) or (SPS
- ❒ Faucet Bracket (FBSL)
- ❒ Poaching Pan (PPR)
- ❒ Vegetable Steamer (VS)
- ❒ 4" Stainless Steel Legs with adjustable feet (LTKS)
- ❒ Stainless Steel Support Stands (ST28) with Sliding Drain Drawer and Splash Screen
- ❒ Food Strainer (FS-15-5)
- ❒ 240 Volts, 60 Hz, 3 Phase (VOSK1)
- ❒ 380/415 Volts, 50 Hz, 3 Phase - For Export (VOSK2)
- ❒ 440/480 Volts, 60 Hz, 3 Phase (VOSK3)
- ❒ Single Phase Option (SPH)

Shown with optional Support Stand (ST28)

Short Form Specifications

Shall be CLEVELAND, Round Tilting Skillet, Model SET-15; ____ KW ____ Volts, 15 Gallon Capacity (56 liters). Complete with: Thermostatic and Safety Controls; Bead Blasted Cooking Surface; Lift-Off Cover with adjustable Vent. All Stainless Steel Construction.

CE

1333 East 179 St.,
Cleveland, Ohio, U.S.A. 44110
Tel: 1-216-481-4900
Fax: 1-216-481-3782
Web Site: www.ClevelandRange.com
Email: Steam@ClevelandRange.com

Manitowoc

Ace Mart Restaurant Supply

CAPACITIES

In 4 oz. servings. Other sizes may be calculated.
15 gallons / 56 Liters 480

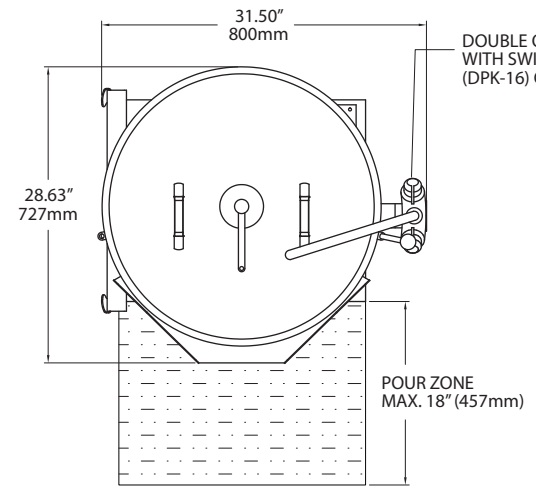

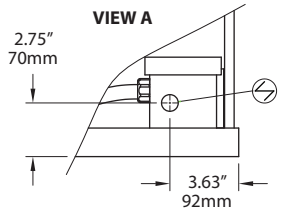

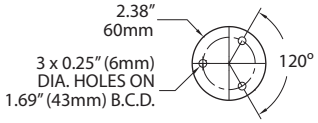

FOOT DETAIL

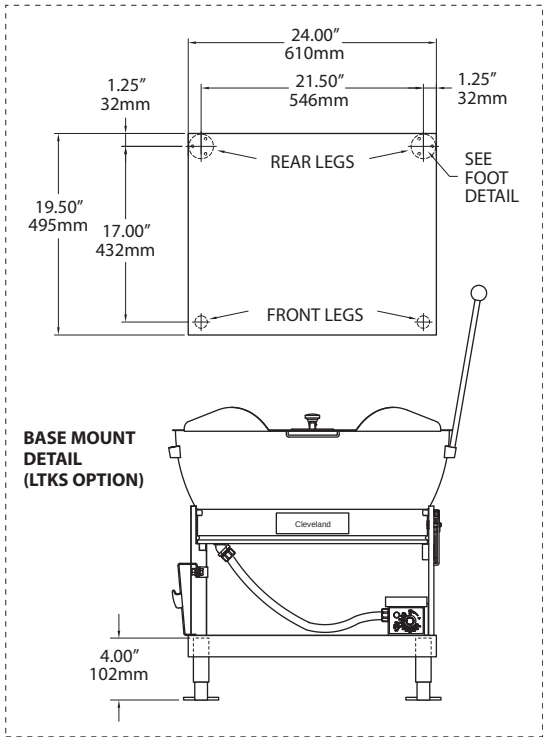

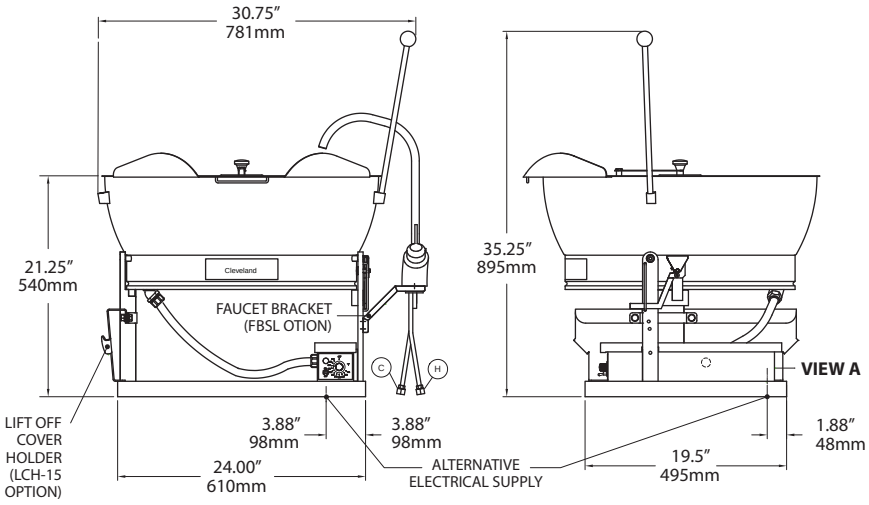

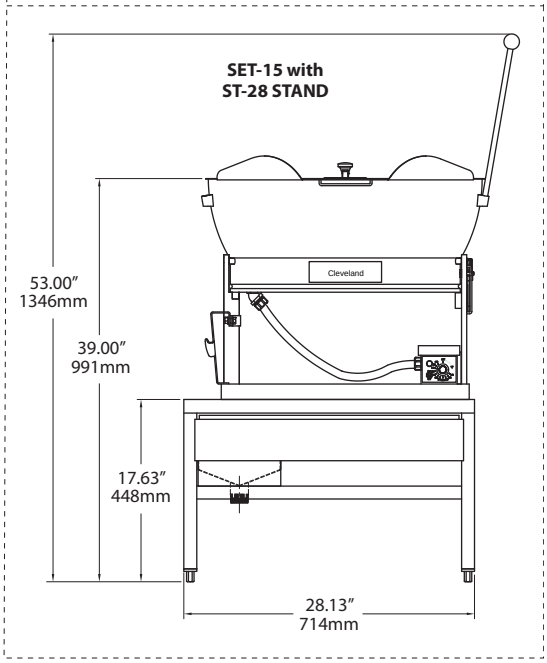

SPECIFICATIONS:

	ELECTRICAL SUPPLY:											
SET-15	208 V			240 V			220/380 V			240/416 V		
15 GAL (56 L)	KW	AMPS 1PH	AMPS 3PH	KW	AMPS 1PH	AMPS 3PH	KW	AMPS 1PH	AMPS 3PH	KW	AMPS 1PH	AMPS 3PH
	7.4	35.4	20.5	7.8	32.7	18.9	6.5	N/A	10	7.8	N/A	11
DUAL VOLTAGE OF 220/380 V SHOWN ON CHART REQUIRE A 4 WIRE, 3 PH ELECTRICAL SUPPLY												

APPROVALS			CLEARANCE:	
UL	CSA	NSF	RIGHT: 4″ (102mm) LEFT: 4″ (102mm) REAR: 0.5″ (13mm)	(H) HOT WATER: (C) COLD WATER: PIPING: 1/2″ NPT (DOUBLE) PIPING: 3/8″ COPPER TUBE (SINGLE) ELECTRIC POWER CONNECTION
✓	✓	✓		

NOTES:
Cleveland Range reserves right of design improvement or modification, as warranted.
Many regional, state and local codes exist and it is the responsibility of the owner and installer to comply with the codes.
Cleveland Range equipment is built to comply with applicable standards for manufacturers. Included among those approval agencies are U.L., NSF, CGA, CSA, ETL and others.

(NOT TO SCALE)

Ace Mart Restaurant Supply