Cleveland

GAS KETTLES

Project _____
Item _____
Quantity _____
FCSI Section _____
Approval _____
Date _____

TABLE TOP, GAS-FIRED KETTLES

TILTING, 2/3 STEAM JACKETED
"SPLASH PROOF SERIES"
6 or 12 GALLONS (23 or 45 LITERS)

MODELS: ☐ *KGT-6-T*
☐ *KGT-12-T*

Cleveland Standard Features

- Self contained gas tilting kettle is easily installed, only needs a gas connection and a 115 volt outlet.
- **Precise, consistent temperature control,** less than 1°C temperature variance (ideal for simmering). Operating temperature range from 145°- 260°F (63°C-127°C).
- **"Splash Proof" solid state control panel** for temperature, low water safety, and power "on/off" switch. Accurate L.E.D. indicators for heat cycle and low water warning.
- **Kettle and all exterior surfaces are a 304 Stainless Steel with a #4 finish.**
- **Energy efficient (65%), high performance gas-fired heating system for fast heat up and recovery time:**
  - Six gallon model with a 34,000 BTU firing rate, and 22,100 BTU directly applied to the product.
  - Twelve gallon model with a 53,000 BTU firing rate, and 34,450 BTU directly applied to the product.
- Supplied with Gas Pressure Regulator.
- Standard for natural gas operation.
- **Self locking marine type tilting mechanism** prevents accidental tilting. Balanced design makes it easy to tilt. The tilt handle easily mounts on left or right side. Double safety gas shut off turns off the gas when the unit is tilted.
- **Large pouring lip for easier, faster pouring.** Heavy duty Rolled Rim design provides strong reinforcement, prevents damages from abuse.
- **"Splash Proof" pressure/vacuum gauge.**
- **Steam jacket permanently filled with treated distilled water,** venting and / or refilling is not required.
- **50 PSI Steam Jacket Rating.** Safety valve mounted toward rear of kettle to avoid tampering.
- **Automatic Electronic Spark Ignition System.**
- Supplied with cord and plug for 115 volt controls.
- Typical approvals include AGA, CSA, NSF and ASME.

Options & Accessories

- ❒ Stainless Steel equipment stand with sliding drain drawer and splash shield (ST-28)
- ❒ Hot and cold water faucet (DPK), or Cold Water (SPK). Requires bracket (FBKT)
- ❒ 316 Stainless Steel Liner (316G)
- ❒ Cooking Baskets (BS)

Short Form Specifications

Shall be CLEVELAND, gas kettle, Table Type, self-contained, tilting, Model KGT- ____-T; ____ gallons, natural or LP gas, 2/3 steam jacketed, type 304 Stainless Steel and supports. Jacket rated at 50 psi with Safety Valve. Complete with solid state water level, temperature, and safety low water power cut off, including LED indicators. Optional lift off cover.

- ❒ Food Strainers (FS)
- ❒ Measuring Strips (MS)
- ❒ Spray Hose (PRS-K)
- ❒ Lift Off Cover (CL)
- ❒ Propane Gas Operation (PG)
- ❒ Kettle Markings (KM)
- ❒ Protective Control Panel (PCE)

1333 East 179 St.,
Cleveland, Ohio, U.S.A. 44110
Tel: 1-216-481-4900
Fax: 1-216-481-3782
Web Site: www.ClevelandRange.com
Email: Steam@ClevelandRange.com

Manitowoc

• CAPACITIES: (in 4 oz. servings, other sizes may be calculated)
6 gallons / 23 liters .....192 servings
12 gallons / 45 liters .....352 servings

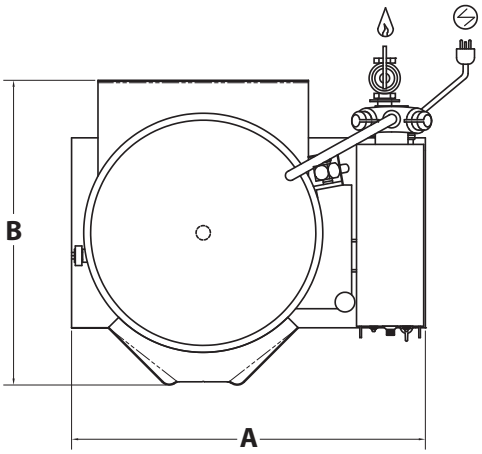

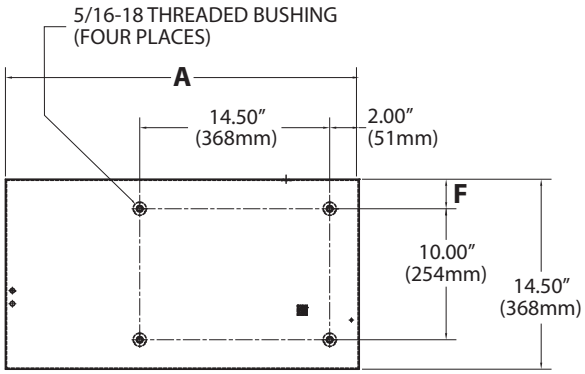

BASE MOUNTING DETAIL

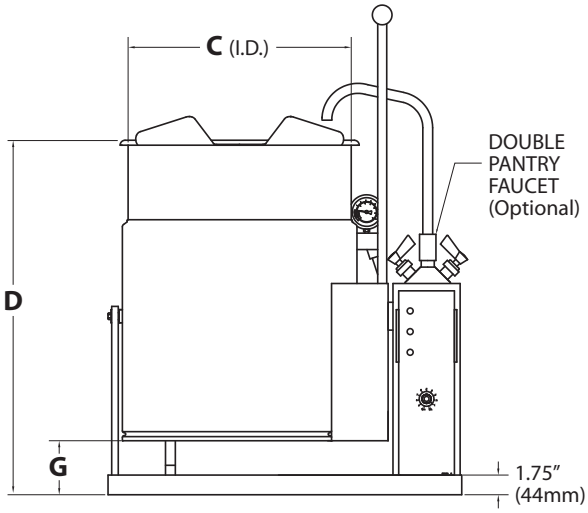

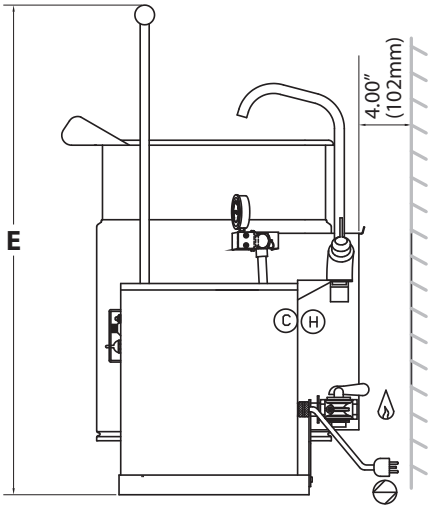

DIMENSIONS

KETTLE SIZE	A	B	C	D	E	F	G
6 GALS (23 LITERS)	24″ (610mm)	19.25″ (489mm)	13.38″ (340mm)	25.25″ (641mm)	30.38″ (772mm)	2.25″ (57mm)	3.75″ (95mm)
12 GALS (46 LITERS)	27″ (686mm)	23.25″ (591mm)	16.75″ (425mm)	27.25″ (692mm)	38.25″ (972mm)	3.25″ (83mm)	2.50″ (64mm)

SPECIFICATIONS

MODEL	ELECTRICAL SUPPLY				GAS SUPPLY (PIPING 3/4″)				
	VOLTS	*PH*	*AMPS*	*FREQ*	*TYPE*	*BTU RATING*	*WATER COLUMN*	*BTU PER CU. FT.*	*SUPPLY PRESSURE*
KGT6T	120	1	5	60	NAT	34,000	4.2	1,000	4″-14″W.C.
	120	1	5	60	LP	34,000	10	2,500	4″-14″W.C.
	220	1	3	60	NAT	34,000	4.2	1,000	4″-14″W.C.
	220	1	3	60	LP	34,000	10	2,500	4″-14″W.C.
KGT12T	120	1	5	60	NAT	53,000	4.2	1,000	4″-14″W.C.
	120	1	5	60	LP	53,000	10	2,500	4″-14″W.C.
	220	1	3	60	NAT	53,000	4.2	1,000	4″-14″W.C.
	220	1	3	60	LP	53,000	10	2,500	4″-14″W.C.

Manufacturer must be notified if unit will be operated above 2,000 ft. [610m] altitude.

(C) COLD WATER (H) HOT WATER

PIPING: 1/2″ NPT (DOUBLE)
PIPING: 3/8″ COPPER TUBE (SINGLE)

CLEARANCE

RIGHT: 0, LEFT: 0, REAR: 4.00″ (102mm)

Allow 12.00″ (305mm) space minimum on right side for service.

SHIPPING WEIGHT

KGT6T: 180 lbs. (82 kgs.)
KGT12T: 195 lbs. (88 kgs.)

NOTES:
Cleveland Range reserves right of design improvement or modification, as warranted.
Many regional, state and local codes exist and it is the responsibility of the owner and installer to comply with the codes.
Installation of backflow preventers, vacuum breakers and other specific coder requirements is the responsibility of the owner and installer.
Cleveland Range equipment is built to comply with applicable standards for manufacturers. Included among those approval agencies are U.L., A.G.A., NSF, ASME/N.Bd., CSA, CGA, ETL and others.