Cleveland

GAS KETTLES

Project _____
Item _____
Quantity _____
FCSI Section _____
Approval _____
Date _____

# LEG TYPE, GAS-FIRED KETTLES

*STATIONARY, 2/3 STEAM JACKETED*
*"SPLASH PROOF SERIES"*
*40, 60, 80 or 100 GALLONS (150, 225, 300 or 337 LITERS)*

**MODELS:** ☐ KGL-40 ☐ KGL-80 ☐ KGL-60 ☐ KGL-100

## Cleveland Standard Features

- High efficiency Power Burner Heating System (62% to 65% efficiency)
- Fast Heat-up and Recovery Time, 140M BTU's on 40 gallon models, 190M BTU's on 60 gallon and larger
- Insulated Heat Exchanger
- Automatic Ignition System
- Steam jacket permanently filled with treated, distilled water. Venting and/or refilling not required
- Solid State Controls, for Temperature and Low Water Safety, in a plug-in Control Module
- Control Panel includes:
  - Precise, consistent temperature control: less than ± 1°C variance (ideal for simmering).
  - L.E.D. Indicators for Heat Cycle and Low Water Warning.
  - Power "on/off" Switch
- Front mounted combination Pressure/Vacuum Gauge
- Type 304 Stainless Steel with #4 finish on kettle and supports
- 2″ diameter Tangent Draw-Off Valve with Drain Strainer
- Support Legs with level adjustable feet, flanged for floor bolting
- Spring-assisted, hinged, rotatable, domed Stainless Steel Cover
- 50 PSI Steam Jacket Rating and Safety valve
- Standard voltage is 115 volts, 60 Hz, single-phase, supplied with cord and plug
- Standard for natural gas operation
- Faucet Mounting Bracket (FBK)
- Typical approvals include AGA, CSA, CE, NSF and ASME

## Options & Accessories

- ❒ Type 316 Stainless Steel Kettle Liner for high acid food products (316)
- ❒ Hot and Cold Water Faucet with Swing Spout (DPK)
- ❒ Cooking Baskets and Tri-Basket Supports (BS and TBS)
- ❒ Drain Strainers (DS-)
- ❒ 3" diameter Tangent Draw-off Valve with Drain Strainer (TD3)

## Short Form Specifications

*Shall be CLEVELAND, Gas-fired Stationary Kettle, Model KGL-____; ____ gallons. 2/3 Steam Jacketed, Power Burner Heating System, Insulated Heat Exchanger, 50 psi Steam Jacket Rating. Infinite Variable Temperature Control, L.E.D. indicators for Heat Cycle and Low Water Warning, spring-assisted Cover, 2″ Tangent Draw-off Valve with Drain Strainer, Automatic Ignition System.*

- ❒ Kettle Accessory Kit (KAK) includes:
  - ❒ Clean-up Brush(CB)
  - ❒ 36″ Kettle Whip(KW)
  - ❒ Draw-off Brush (DB)
  - ❒ 36″ Kettle Paddle (KP)
  - ❒ 36″ Kettle Brush (KB)
  - ❒ 24 oz. Ladle (KL)
- ❒ Automatic Water Meter (GMF or LMF)
- ❒ Measuring Strip (MS)
- ❒ Option for Propane Gas operation
- ❒ Correctional Package
- ❒ Heat Deflector Shield (HS001)



1333 East 179 St.,
Cleveland, Ohio, U.S.A. 44110
Tel: 1-216-481-4900
Fax: 1-216-481-3782
Web Site: www.ClevelandRange.com
Email: Steam@ClevelandRange.com

Manitowoc

Ace Mart Restaurant Supply

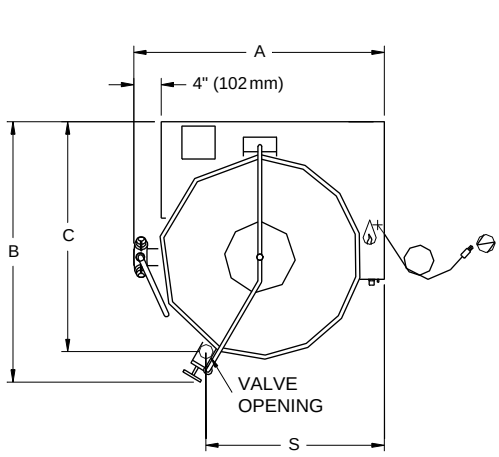


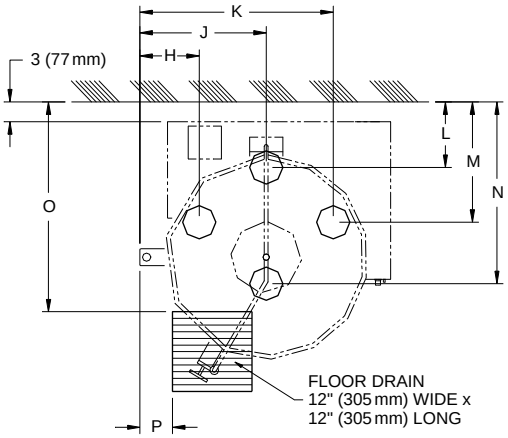


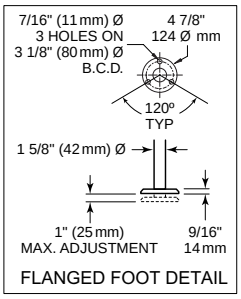


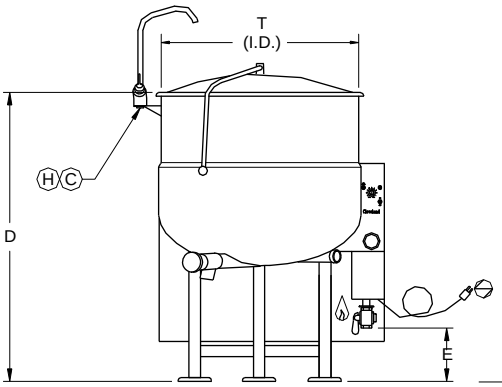


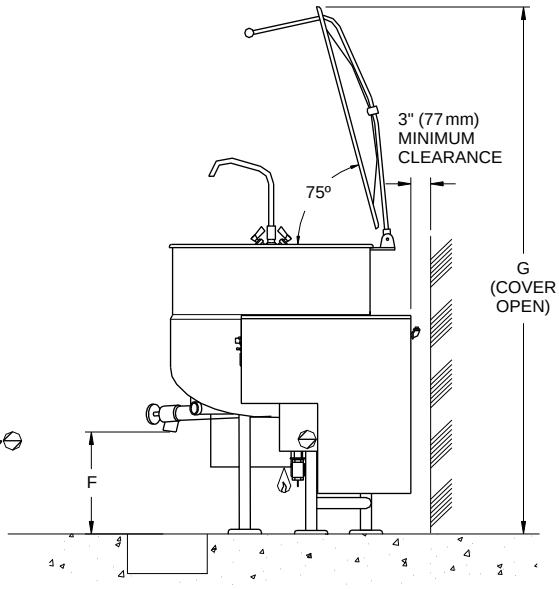


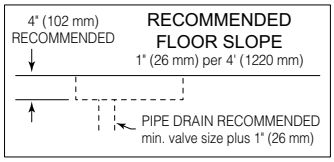


UNIT SHOWN WITH OPTIONAL 2" TANGENT DRAW-OFF VALVE, SPRING ASSIST COVER AND HOT & COLD WATER FAUCET.

CAPACITIES: (in 8 oz. servings, other sizes may be calculated)
- 40 Gallon / 150 liters . . . 640 servings
- 60 Gallon / 225 liters . . . 960 servings
- 80 Gallon / 300 liters . . . 1280 servings
- 100 Gallon / 375 liters . . . 1600 servings

## DIMENSIONS

| GALS./ LITERS | | A | B | C | D | E | F | G | H | J | K | L | M | N | O | P | S | T I.D. |
|---|---|---|---|---|---|---|---|---|---|---|---|---|---|---|---|---|---|---|
| 40 | IN | 35 1/8 | 37 | 32 1/4 | 40 1/2 | 9 1/4 | 16 | 71 1/2 | 9 9/16 | 17 3/4 | 25 15/16 | 10 3/8 | 18 5/8 | 26 7/8 | 28 1/2 | 4 5/8 | 24 1/2 | 26 |
| 150 | mm | 893 | 940 | 820 | 1029 | 235 | 407 | 1817 | 243 | 451 | 659 | 264 | 474 | 683 | 724 | 118 | 648 | 661 |
| 60 | IN | 38 1/4 | 39 | 34 1/4 | 43 1/2 | 8 3/4 | 14 1/4 | 75 | 8 15/16 | 19 1/8 | 29 5/16 | 10 3/8 | 18 5/8 | 27 7/8 | 30 1/4 | 5 1/4 | 27 | 29 1/2 |
| 225 | mm | 972 | 991 | 870 | 1105 | 223 | 362 | 1905 | 228 | 486 | 745 | 264 | 474 | 709 | 769 | 134 | 686 | 750 |
| 80 | IN | 41 5/8 | 42 3/8 | 35 1/2 | 45 1/2 | 8 3/4 | 15 1/2 | 79 | 9 1/4 | 20 3/4 | 32 1/4 | 10 3/8 | 18 5/8 | 29 5/8 | 31 1/2 | 6 5/8 | 29 | 33 |
| 300 | mm | 1058 | 1077 | 902 | 1156 | 223 | 394 | 2007 | 235 | 528 | 820 | 264 | 474 | 753 | 801 | 169 | 737 | 839 |
| 100 | IN | 44 | 43 1/2 | 36 1/2 | 47 1/2 | 8 3/4 | 15 1/2 | 83 1/2 | 9 1/8 | 21 7/8 | 34 5/8 | 10 3/8 | 18 5/8 | 31 1/4 | 32 1/2 | 7 1/2 | 30 1/2 | 35 1/2 |
| 375 | mm | 1118 | 1105 | 928 | 1207 | 22.3 | 394 | 2121 | 232 | 556 | 880 | 264 | 474 | 794 | 826 | 191 | 775 | 902 |

| GAS | | | ELECTRIC | WATER (H) (C) | CLEARANCE |
|---|---|---|---|---|---|
| NATURAL | PROPANE | B.T.U. RATING | 120V-1 Phase, 60 Hz, 10 amps | (H) (C) ½" dia. Soft Copper Tubing (each) When ordered with optional faucet. | RIGHT = 3" LEFT = 3" REAR = 3" Allow 6" space minimum from rear and sides when located near combustible walls. 12" recommended on right side for service |
| Piping: ¾" N.P.T. Supply pressure: 4.00" W.C. minimum 14.00" W.C. maximum | Piping: ¾" N.P.T. Supply pressure: 4.00" W.C. minimum 14.00" W.C. maximum | 40 gal. 140,000 60 gal. 80 gal. 190,000 100 gal. | | | |
| Manufacturer must be notified if unit will be operated above 2,000 ft. altitude. | | | | | |

**NOTES**:
Cleveland Range reserves right of design improvement or modification, as warranted.
Many regional, state and local codes exist and it is the responsibility of the owner and installer to comply with the codes.
Installation of backflow preventers, vacuum breakers and other specific coder requirements is the responsibility of the owner and installer.
Cleveland Range equipment is built to comply with applicable standards for manufacturers. Included among those approval agencies are U.L., A.G.A., NSF, ASME/N.Bd., CSA, CGA, ETL and others.



Ace Mart Restaurant Supply