SUPER DECK
Y SERIES
GAS DECK OVENS

Job _____ Item # _____

GAS DECK OVENS

- ❑ **Model Y-600 Single**
- ❑ **Model Y-602 Double**

- ❑ **Model Y-800 Single**
- ❑ **Model Y-802 Double**

Model Y-602
with optional casters

SPECIFICATIONS

BAKERS PRIDE Super Deck Y-Series gas Deck Ovens are designed for high volume pizza and all-purpose operations.

Ovens may be stacked two high. Oven exteriors are all heavy-gauge, type 403 stainless steel and are fully insulated up to 5" (127mm) thick for cooler outer temperatures and consistent interior temperatures.

Interior oven frame is constructed of 1/4" (6mm) heavy-duty angle iron frame, completely welded to form a single, unitized section. The oven body and lining are then welded to the framework.

Oven interiors are manufactured of high-heat resistant 16-gauge aluminized steel. Doors are fully insulated, spring balanced with tubular steel handles and will remain open or closed until moved.

All models feature independent, operator-controlled top & bottom heat control dampers and micro slides for perfectly balanced results.

Y Series features a 300°-650° F (149°-343°C) throttling thermostat, 8" (203mm) interior deck height with 1 1/2" (38mm) thick hearth baking decks (steel decks optional) and are supported by a 1/4" (6mm) angle iron frame.

Combination gas control incorporates a manual gas valve, pilot safety and pressure regulator. Easily removable, slide-out, heavy-duty flame diverters distribute the burner flame uniformly in the burner chamber. A 3/4" (19mm) NPT gas connection is located on the left side and left rear of oven - operator/installer may choose.

Heavy-duty, 7-gauge hot rolled steel legs are standard and finished with durable Bakertone.

1 Year limited part and labor warranty standard.

STANDARD FEATURES

- ❑ Y Series @ 120,000 BTUH per deck, natural or LP gas — CE not available in LP gas
- ❑ 300°-650° F (149°-343°C) throttling thermostat
- ❑ Top & bottom heat control dampers & micro-slides
- ❑ Combination gas controls with valve, regulator & pilot safety
- ❑ Heavy-duty, slide-out flame diverters
- ❑ 8" (203mm) interior deck heights with 1 1/2" (38mm) thick hearth baking decks
- ❑ All stainless steel exteriors
- ❑ Aluminized steel interiors
- ❑ Spring balanced, fully insulated doors
- ❑ Side or rear gas connections
- ❑ 7-Gauge legs
- ❑ Fully insulated throughout
- ❑ 1 Year limited part and labor warranty

OPTIONS & ACCESSORIES

- ❑ 140,000 BTUH
- ❑ Side-mounted controls
- ❑ Steel decks
- ❑ 150°-550° F (65°-288°C) thermostat
- ❑ Set of 4 casters - two with locks
- ❑ Stainless steel leg covers
- ❑ Special height legs
- ❑ Steam Injection
- ❑ Automatic oven starter
- ❑ Draft flue for direct vent (not available on CE units)
- ❑ Fire brick hearth decks (Y-600/602 only)
- ❑ Black powder-coated bake chamber and combustion chamber doors with hardwood handles
- ❑ Black powder-coated hinged control panel door
- ❑ DSP style - apply stone or tile finish directly to oven exterior - skirts provided

CERTIFICATIONS

BAKERS PRIDE OVEN COMPANY, INC.
30 Pine Street, New Rochelle, NY 10801
914/576-0200 • 1-800-431-2745 • fax 914/576-0605
www.bakerspride.com

Continuous product improvement is a policy of Bakers Pride Oven Company. Therefore, specifications and design are subject to change without notification

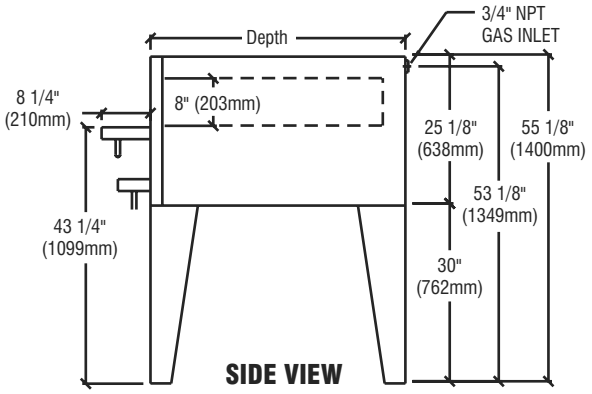

SIDE VIEW
Single Unit RH

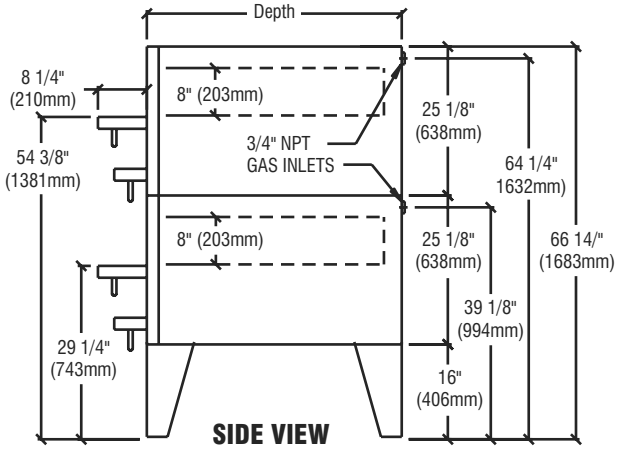

SIDE VIEW
Stacked Unit RH

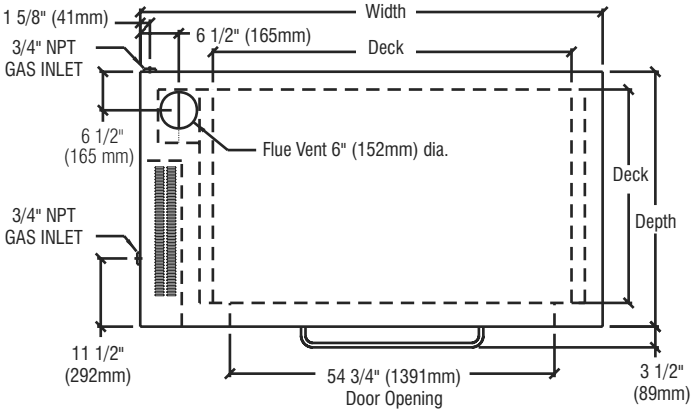

TOP VIEW

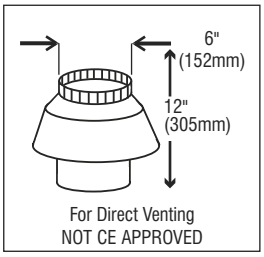

MUST BE SPECIFIED AT TIME OF ORDER

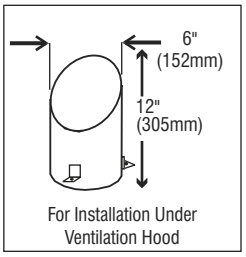

STANDARD

ALL DIMENSIONS NOMINAL

SHIPPING INFORMATION

Model	Shipping Weight Lbs.	Shipping Weight Kilos	Carton Dimensions Width Inches	Carton Dimensions Width mm	Carton Dimensions Depth Inches	Carton Dimensions Depth mm	Carton Dimensions Height Inches	Carton Dimensions Height mm	Crate Size Cubic Feet	Crate Size Cubic Meter
Y-600	1385	626	31	787	53	1364	82	2083	76	2.4
Y-800	1600	726	31	787	60	1365	86	2184	78	2.8

Shipping class — #70
Each oven ships separately
Hearth Decks and Legs ship in separate cartons

GAS SUPPLY

Model	BTUH	KW	CONNECTION
Y-600	120,000	35.15	3/4"
Y-602	240,000	70.30	3/4"
Y-800	120,000	35.15	3/4"
Y-802	240,000	70.30	3/4"

CE *certification not available in LP gas*

SPECIFICATIONS

Model	Deck Sizes in.	Deck Sizes mm	# Decks	Overall Dimensions Width Inches	Overall Dimensions Width mm	Overall Dimensions Depth Inches	Overall Dimensions Depth mm	Overall Dimensions Height Inches	Overall Dimensions Height mm
Y-600	36 x 60	914 x 1524	1	78	1981	43	1092	55 1/8	1400
Y-602	36 x 60	914 x 1524	2	78	1981	43	1092	66 1/4	1683
Y-800	44 x 66	1118 x 1676	1	84	2134	51	1295	55 1/8	1400
Y-802	44 x 66	1118 x 1676	2	84	2134	51	1295	66 1/4	1683

MINIMUM CLEARANCES

	Noncombustible Construction Inches	Noncombustible Construction mm	Combustible Construction Inches	Combustible Construction mm
Right	0	0	1	25
Left	0	0	3	76
Rear	2	51	3	76

BAKERS PRIDE
BAKERS PRIDE OVEN COMPANY, INC.
30 Pine Street, New Rochelle, NY 10801
914/576-0200 • 1-800-431-2745 • fax 914/576-0605
www.bakerspride.com

Continuous product improvement is a policy of Bakers Pride Oven Company. Therefore, specifications and design are subject to change without notification

TSW: 09/05