Item #_____

Model 800A Series

Manual Gravity Feed Slicers

- ❑ 825A 10″ Knife
- ❑ 827A 12″ Knife

Model 825A

Safety and Convenience Features

Berkel Models 825A and 827A manual gravity feed slicers feature Berkel's hollow ground, chromium-plated carbon steel knife and built-in, dual-action sharpener with convenient handle located on the sharpener cover. The tapered permanent guard covers the non-slicing portion of the knife even when the sharpener and center plate are removed. The 45° table makes product feed easier, creating more consistent and uniform slices with less waste. The compact space-saving design is ideal for limited kitchen counter space. Units are easy to clean and disassemble quickly without tools.

Standard Features

- ➤ 1-speed, 1/3 HP (825A), 1/2 HP (827A), totally enclosed and permanently lubricated knife motor
- ➤ Furnished in 115/60/1, 2.5 amp, AC, ETL listed
- ➤ Finish is stainless steel and sanitary, anodized aluminum; unit disassembles quickly without tools for easy cleaning
- ➤ 45° Product table
- ➤ ❑ 825A is a nominal 10″ (250 mm) diameter; ❑ 827A is a nominal 12″ (300 mm) diameter; hollow ground, hardened and polished forged chromium-plated carbon steel knife
- ➤ ❑ 825A carriage handles food up to 8-3/4″ (222 mm) wide, by 6″ (152 mm) high or 7″ (178 mm) diameter; ❑ 827A carriage handles food up to 10-3/4″ (273 mm) wide, by 7-5/8″ (194 mm) high or 7-3/8″ (187 mm) diameter
- ➤ Precise slice adjustment to a thickness of 9/16″ (14 mm)
- ➤ Built-in, top-mounted, two stone knife sharpener with dual-action system
- ➤ Permanent, tapered knife ring guard covers non-slicing portion of knife even when the sharpener and center plate are removed; ring guard design provides more room behind the knife for easy cleaning
- ➤ Positive, moisture protected, rotary on/off switch and power indicator light
- ➤ Attached 6-foot, flexible, 3-wire cord and plug for grounded receptacle

Accessories

- ❑ Stainless steel vegetable chute with pusher (827A only)

Approved By:_____
Date _____

Berkel Company • 4406 Technology Drive • South Bend, IN 46628-9700
574-232-8222 • 800-348-0251 • FAX 888-888-2838 • www.berkel.com

Form #SPC02-0607R

Berkel

Manual Gravity Feed Slicer **Model 800A Series**

Model 800A Series

Manual Gravity Feed Slicers

Model No.	Cutting Capacity	Slice Thickness	Knife Diameter	Product Dimensions Width A	Depth B	Height C
825A	8-3/4″ (222mm) wide 6″ (152 mm) high 7″ (178 mm) diameter	to 9/16″ (14 mm)	10″ (250mm)	17-1/2″ (445 mm)	21-1/8″ (537 mm)	15″ (381 mm)
827A	10-3/4″ (273 mm) wide 7-5/8″ (194 mm) high 7-3/8″ (187 mm) diameter	to 9/16″ (14 mm)	12″ (300mm)	20″ (508 mm)	25-1/4″ (641 mm)	16-7/8″ (429 mm)

	Motor	Electrical	Weight Net	Ship	Box Dimensions Width	Depth	Height
825A	1-speed 1/3 HP	115/60/1	37 lbs. (17 kg.)	47 lbs. (21 kg)	24-3/4″ (629 mm)	19-3/4″ (502 mm)	17-1/2″ (445 mm)
827A	1-speed 1/2 HP	115/60/1	60 lbs. (28 kg.)	74 lbs. (35kg)	29″ (737 mm)	24-1/2″ (622 mm)	22-3/4″ (578 mm)

Specifications

Motor: 1-speed, 1/3 HP (❑ 825A), 1/2 HP (❑ 827A), totally enclosed, permanently lubricated ball bearings, thermally protected.

Electrical: Furnished in 115/60/1, 2.5 amp, AC, ETL listed.

Finish/Construction: All food contact areas are stainless steel or anodized aluminum including the pusher, gauge plate, product table, center plate, slice deflector, ring guard, sharpener cover and one-piece base. Slicer disassembles quickly without tools for easy cleaning.

Knife: ❑ 825A is a nominal 10″ (250 mm) diameter; ❑ 827A is a nominal 12″ (300 mm) diameter, hollow ground, hardened and polished forged chromium-plated carbon steel.

Cutting Capacity: ❑ 825A carriage handles food up to 8-3/4″ (222 mm) wide by 6″ (152 mm) high or 7″ (178 mm) diameter; ❑ 827A carriage handles food up to 10-3/4″ (273 mm) wide by 7-5/8″ (194 mm) high or 7-3/8″ (187 mm) diameter.

Slice Thickness: Precision system provides infinite slice adjustment and consistent cuts of hard or soft foods from tissue thin to 9/16″ (14 mm).

Full Gravity Feed: Full 45° angle feed requires less mechanical pressure. Equipped with anodized aluminum pusher to hold product and minimize waste.

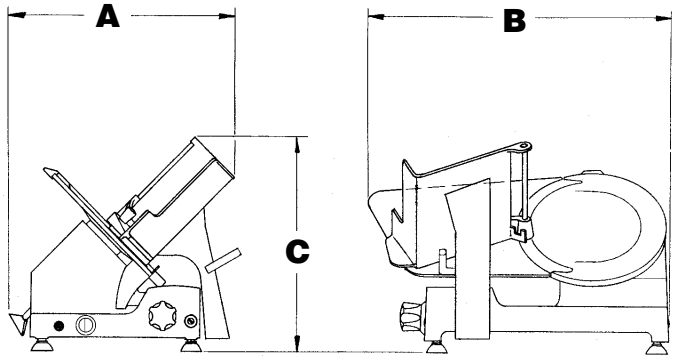

Knife Sharpener: Built-in, top-mounted, two stone dual-action system for a lasting, razor-sharp edge. Unit is removable and submersible for easy cleaning.

Knife Ring Guard: Permanent, tapered guard covers non-slicing portion of knife edge even when the sharpener and center plate are removed. The ring guard is designed to provide added room behind the knife for easy cleaning.

On/Off Switch: Highly reliable, moisture resistant, rotary on/off switch and power indicator light.

Cord and Plug: Attached 6-foot, flexible, 3-wire cord and plug for grounded receptacle.

Warranty: All parts, service and travel coverage for one year, excluding wear items.

As we continually strive to improve our products, specifications are necessarily subject to change without notice.

Berkel Company • 4406 Technology Drive • South Bend, IN 46628-9700
574-232-8222 • 800-348-0251 • FAX 888-888-2838 • www.berkel.com

Form #SPC02-0607R
© 2002 Berkel Company
Litho in U.S.A.