Classic Countertop Round Cooker/Warmers

Model: ☐ RCW-7 ☐ RCW-11

PRODUCT: QUANTITY: ITEM #:

Designed Smart

- High performance, fast recovery design that is perfect for re-thermalizing refrigerated soup, stews, chills or other food products served out of a round inset
- Thermostatically controlled heat system provides fast heat up and recovery, and can reach intense temperatures that produce consistent steam heat (212º)
- Units are designed with high wattage systems that generate faster start-ups to the required temperatures.
- Distributes heat throughout the unit while protecting interior parts and countertops from heat build-up
- Ideal for thawing frozen soups and holding the thawed soup at NSF-safe serving temperatures

MODEL RCW-11

Built Solid

- 7 qt. (RCW-7) or 11 qt. (RCW-11) capacity
- Stainless steel housing with stainless steel liner.
- Thermostatic control
- Raised liner edge (marine lip) prevents outside condensation
- Electric low watt density element provides fast, even heat.
- Wet or dry operation
- Uses standard insets and covers (not included)

Reliability backed by APW Wyott's Warranty

- APW Wyott warming equipment is backed by a 1-year parts and labor warranty, including our "Enhanced Warranty" service that replaces new units with certain product issues through the convenience of direct factory shipments.

- Certified by the following agencies:

See reverse side for product specifications.

APW Wyott Foodservice Equipment Company · 729 Third Ave., Dallas, TX 75226
(800) 527-2100 · (214) 421-7366 · Fax (214) 565-0976 · www.apwwyott.com· info@apwwyott.com

Rev. 6/05/2008

Classic Countertop Round Cooker/Warmers

Model: ☐ RCW-7 ☐ RCW-11

PRODUCT: QUANTITY: ITEM #:

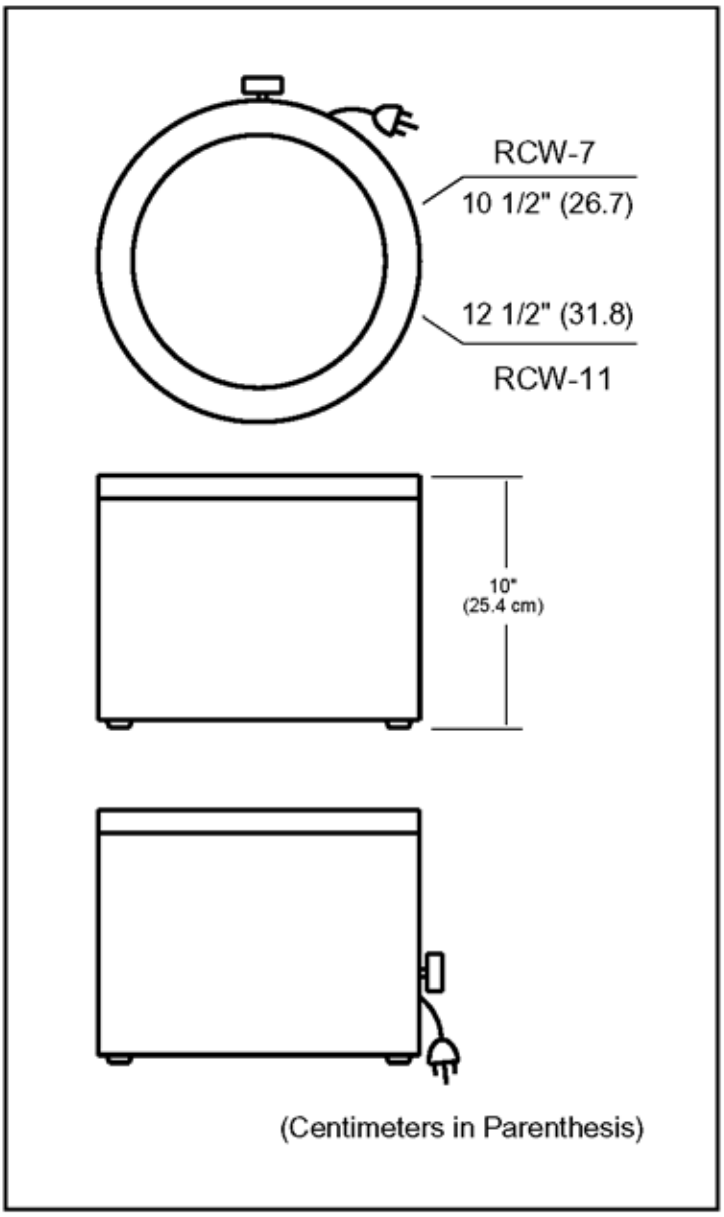

PRODUCT SPECIFICATIONS

Construction:

Stainless steel well pan and housing, fiberglass insulation.

Dimensions:

RCW-7: Diameter 10½" (26.7 cm)
Height 10" (25.4 cm)
RCW-11: Diameter 12½" (31.8 cm)
Height 10" (25.4 cm)

Electrical Information:

Each unit is equipped with a 60", three wire grounded power cord which terminates with a standard three pronged male plug. The 120V unit uses a NEMA 5-15P plug.

Electrical Specifications:

RCW-7: 120V, 1000W, 8.3 Amps
RCW-11: 120V, 1200W, 10.0 Amps

Capacity:

RCW-7: 7 qts. (6.6 L)
Holds standard 7 quart inset.
RCW-11: 11 qts. (10.4 L)
Holds a standard 11 quart inset

Shipping Information:

RCW-7: 10 lbs. (4.54 kg)
RCW-11: 12 lbs. (5.45kg)

F.O.B./ Dallas, TX 75226

**APW Wyott reserves the right to modify specifications or discontinue models without incurring obligation.*

APW Wyott Foodservice Equipment Company · 729 Third Ave., Dallas, TX 75226
(800) 527-2100 · (214) 421-7366 · Fax (214) 565-0976 · www.apwwyott.com· info@apwwyott.com
Rev. 6/05/2008
#1505