# Mr. Frank™
# Hot Dog Display Steamer

Models ☐ DS-1A 120V ☐ DS-1A 240V ☐ DS-1A 230VCE ☐ DS-1AP 120V

PRODUCT: QUANTITY: ITEM:

## Designed Smart

**Leader in "Hot and Fresh" Food Equipment!**

- APW Wyott has a wide variety of "Hot and Fresh" Food equipment and the best supporting elements in refrigerated or heated dispensers, pumps and condiment Stations.
- The Mr. Frank Hot Dog Display Steamer, when combined with the Condiment Serving Station, is unmatched in building impulse sales and "Hot and Fresh" Food profits.
- Mr. Frank Hot Dog Display Steamer features eye-catching hot dog graphics with the "Hot and Fresh" theme.

**Designed to Deliver Great Tasting Hot Dogs!**

- Heating system can cook hot dogs in less than 20 minutes and holds them at NSF safe temperatures for serving customers.
- Steamer holds 150 hot dogs and 60 buns.
- Divided steaming pan allows control of steam levels for hot dogs vs. buns.

**Easy to Operate and Maintain!**

- Steamer heats quickly and has a fast recovery for unexpected surges in hot dog demand.
- Steamer is designed to require minimal labor: Operator can easily access hot dogs and buns through rear doors that open wide.
- Stainless steel interiors and exteriors are easy to clean.
- Steamer has built-in "easy to remove" drip tray for easy cleaning.
- Drain valve provided to remove excess water in steam tanks.
- Available as pass through.

## APW Wyott Design Features

- Cabinet is constructed of stainless steel for maximum durability.
- Display window is made of tempered glass.

*Warranty does not include rock grates, cooking grates, burners shields or fireboxes.

Model: DS-1A Hot Dog Display Steamer

## APW Wyott Supporting Products

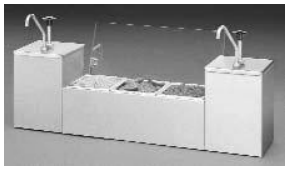

**Condiment Serving Station**

*Includes two 1-gallon end wells with pumps and a non-refrigerated section of container.

**Refrigerated Condiment Serving Station**

*Includes two 1-gallon end wells with pumps and a non-refrigerated section of container.

## Reliability backed by APW Wyott's Warranty

All APW Wyott Hot Dog Equipment is backed by a 1-year limited warranty and a 1-year on-site labor warranty.

•Certified by the following agencies:

UL NSF CSA CE PROTECTED BY APW WYOTT 1 YEAR LIMITED WARRANTY

See reverse side for product specifications.

*APW Wyott Foodservice Equipment Company* * *729 Third Ave., Dallas, TX 75226* *Rev.072211rv*
*(800) 527-2100 * (214)421-7366 * Fax (214) 565-0976 * www.apwwyott.com * info@apwwyott.com*

# Mr. Frank™
# Hot Dog Display Steamer

Models ☐ DS-1A 120V ☐ DS-1A 240V ☐ DS-1A 230VCE ☐ DS-1AP 120V

PRODUCT: QUANTITY: ITEM:

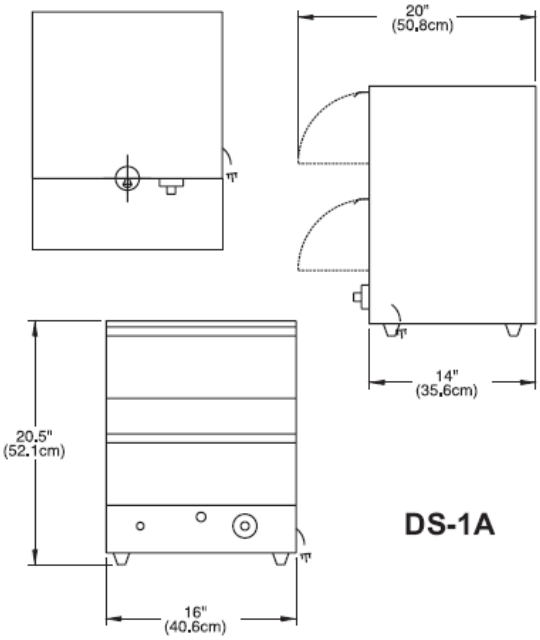


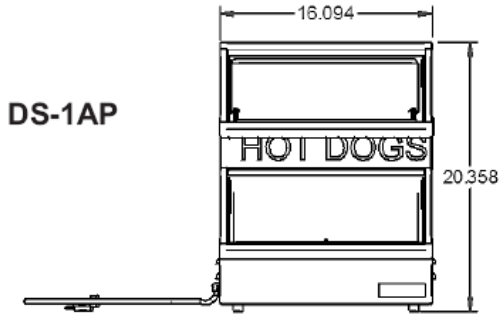


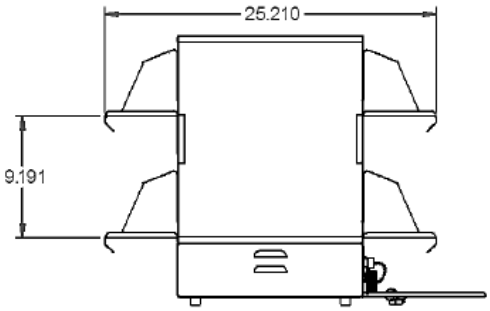


## PRODUCT SPECIFICATION

**Construction:**
Stainless steel interior and exterior, tempered glass and 1" adjustable legs.

**Electrical Information:**
Each 120 unit is equipped with at least 60" three grounded power cord which terminates with a standard three-pronged male plug. The 120V unit utilizes a NEMA 5-15P plug. The 240V and 230V units are provided with a 60" power cord with no plug.

**Electrical Specifications:**
120V, 800W, 6.7 Amps
240V, 800W, 3.3 Amps
230VCE, 735W, 3.2 Amps

**Overall Dimensions:**
20 1/2"H x 16"W x 14"D
(52 cm x 40.6 cm x 35.6 cm)

**Capacity:**
Up to 150 standard hot dogs
Up to 60 standard hot dog buns

**Shipping Weight:**

| | |
|---|---|
| DS-1A | 36 lbs (16.3 kg) |
| DS-1AP | 42 lbs (19.3 kg) |

FOB: Cheyenne WY 82007

*APW Wyott reserves the right to modify specifications or discontinue models without incurring obligation.


***APW Wyott Foodservice Equipment Company*** ** 729 Third Ave., Dallas, TX 75226* *Rev.072211rv*
*(800) 527-2100 * (214)421-7366 * Fax (214) 565-0976 * www.apwwyott.com * info@apwwyott.com*