STAINLESS STEEL

Fabricated Economy SINKS
Three & Four Compartments

Item #: _____ ***Qty #:*** _____

Model #: _____

Project #: _____

Fabricated Bowls are Welded Together at the Seams

K-700
Removable
Side Splashes
Fits Left OR
Right Side

MATERIAL:

1 5/8" diameter stainless steel legs with 1" adjustable stainless steel bullet feet.

Entire unit is 16 gauge 304 stainless steel.

Gussets - stainless steel.

MECHANICAL:

- Supply is 1/2" IPS hot & cold.
- Faucet holes on 8" centers.
- Faucets are not included **(see accessories)**.
- Waste drains are 1 1/2" IPS S/S basket type, located in center of sink bowl, and are included.

FEATURES:

Backsplash has tile edge for ease of installation.

Sink bowls are 3/4" coved corner and meet NSF requirements.

Rolled Rim Edge for additional strength.

Sink Bowls are 14" deep for greater capacity.
NOTE: 15" x 15" bowls are 12" deep.

CONSTRUCTION:

All TIG welded.

Welded areas blended to match adjacent surfaces and to a satin finish.

Gussets welded to a die-formed reinforced plate.

Customer Service Available To Assist You 1-800-645-3166 8:30 am - 8:00 pm E.S.T.

Email Orders To: customer@advancetabco.com. For Smart Fabrication™ Quotes, Email To: smartfab@advancetabco.com or Fax To: 631-586-2933

www.advancetabco.com

NEW YORK	GEORGIA	TEXAS	NEVADA
Fax: (631) 242-6900	Fax: (770) 775-5625	Fax: (972) 932-4795	Fax: (775) 972-1578

DIMENSIONS and SPECIFICATIONS

TOL Overall: ± .500"
Interior: ± .250"

ALL DIMENSIONS ARE TYPICAL

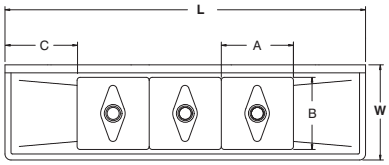

3 COMP - 2 DRBD

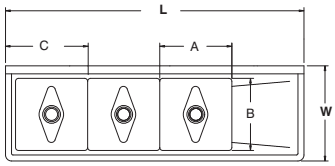

3 COMP - 1 DRBD

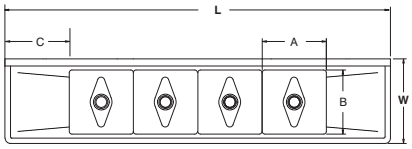

4 COMP - 2 DRBD

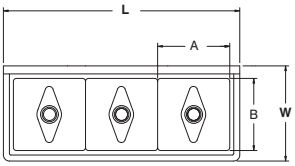

3 COMP

NSF

THREE COMPARTMENT

MODEL #	Length L	Width W	Bowl Size A & B	Drbd. Length C	# of Drbrds.	Drbrd. Location	Wt
** FC-3-1515	50"	20 1/2"	15"x15"	N/A	0	None	110 lbs.
** FC-3-1515-15RorL	62 1/2"	20 1/2"		15"	1	Specify	120 lbs.
** FC-3-1515-15RL	75"	20 1/2"		15"	2	R & L	120 lbs.
FC-3-1620-18RL	84"	26"	16"x20"	18"	2	Both	125 lbs.
FC-3-1818	59"	24"	18"x18"	N/A	0	None	120 lbs.
FC-3-1818-18RorL	74 1/2"	24"		18"	1	Specify	128 lbs.
FC-3-1818-24RorL	80 1/2"	24"		24"	1	Specify	136 lbs.
FC-3-1818-18RL	90"	24"		18"	2	R & L	140 lbs.
FC-3-1818-24RL	102"	24"		24"	2	R & L	150 lbs.
FC-3-1824	59"	30"	18"x24"	N/A	0	None	135 lbs.
FC-3-1824-18RorL	74 1/2"	30"		18"	1	Specify	142 lbs.
FC-3-1824-24RorL	80 1/2"	30"		24"	1	Specify	150 lbs.
FC-3-1824-18RL	90"	30"		18"	2	R & L	265 lbs.
FC-3-1824-24RL	102"	30"		24"	2	R & L	300 lbs.
FC-3-2424	77"	30"	24"x24"	N/A	0	None	175 lbs.
† FC-3-2424-18RorL	92.5	30"		18"	1	Specify	310 lbs.
† FC-3-2424-18RL	108"	30"		18"	2	R&L	330 lbs.
† FC-3-2424-24RorL	98 1/2"	30"		24"	1	Specify	330 lbs.
† FC-3-2424-24RL	120"	30"		24"	2	R & L	350 lbs.
FC-3-2030-20RL	100"	36"	20"x30"	20"	2	Both	315 lbs.

** Bowls are 12" Deep. † Requires Two Sets of Faucets

FOUR COMPARTMENT

MODEL #	Length L	Width W	Bowl Size A & B	Drbd. Length C	# of Drbrds.	Drbrd. Location	Wt
**† FC-4-2424-24RL	144"	30"	24"x24"	24"	2	R & L	350 lbs.

** Four Compartment Sink Bowls are 12" Deep. † Requires Two Sets of Faucets

ACCESSORIES	Model #	Qty
DRAINS		
FAUCETS		

PLUMBING ROUGH-IN

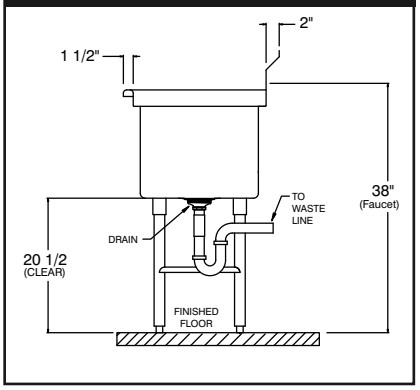

SECTION

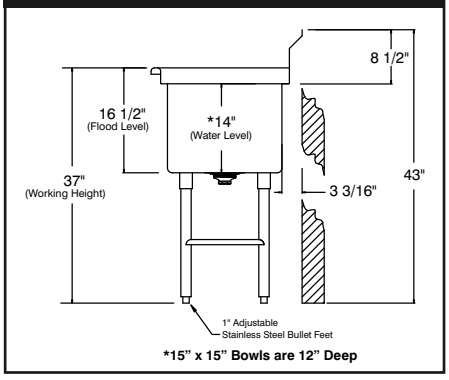

*15" x 15" Bowls are 12" Deep

ADVANCE TABCO
SMART FABRICATION

ADVANCE TABCO is constantly engaged in a program of improving our products. Therefore, we reserve the right to change specifications without prior notice.

200 Heartland Boulevard, Edgewood, NY 11717-8380
© ADVANCE TABCO, JULY 2012