STAINLESS STEEL

DROP-IN SINKS

One Compartment - FOR HAND SINK USE

Sinks Includes Gooseneck Faucet & Drain

Item #: _____ ***Qty #:*** _____

Model #: _____

Project #: _____

FEATURES:

One piece seamless **Deep Drawn** sink bowl design.

All sink bowls have a large liberal radii with a minimum dimension of 2" and are rectangular in design for increased capacity.

Self-Rim Design. Mounting clips provided accomodate all thicknesses of counter. (Quantity supplied varies based on drop in sink ordered).

Includes 4" O.C. **K-52** faucet & basket drain.

CONSTRUCTION:

Unit fabricated from one sheet of stainless steel.

All bowls are Sound Deadened.

Units feature Advance Tabco's **Smart Finish™**.

MECHANICAL:

Faucet supply is 1/2" IPS male thread.

Deck mounted faucet is furnished with aerator and 4" O.C.

MATERIAL:

20 gauge type 304 series stainless steel.

Faucets are brass-nickel plated.

Stainless Steel 1-1/2" IPS basket drain.

DI-1-5

DI-1-25

DI-1-5SP

DI-1-10

New 6" Rear & Side Splash

DI-1-10SP

DI-1-35

STANDARD MOUNTING CLIPS accomodate all thicknesses of counter.

Replacement # K-28 (Per Sink)

Available Faucets & Accessories	Model #	Qty
Deck Mounted 3 1/2" Gooseneck. 4" O.C.	**K-52**	
Deck Mounted 8 1/2" Gooseneck. 4" O.C.	**K-55**	
Deck Mounted Swing w/Spray. 8" O.C.*	**K-58**	
Deck Mtd. X.H.D. 3 1/2" Gooseneck. 4" O.C.	**K-62**	
Mounting Clips (Bag of 4).	**K-28**	

*REQUIRES **K-472** FAUCET HOLE REVISION

Standard Faucet conforms to NSF 61 Standard 9. An optional faucet upgrade is required for compliance to AB 1953 Standards.

For Replacement Faucets & Upgrades, Drains & Accessories visit our website at www.advancetabco.com

Customer Service Available To Assist You 1-800-645-3166 8:30 am - 8:00 pm E.S.T.

Email Orders To: customer@advancetabco.com. For Smart Fabrication™ Quotes, Email To: smartfab@advancetabco.com or Fax To: 631-586-2933

www.advancetabco.com

NEW YORK Fax: (631) 242-6900 | **GEORGIA** Fax: (770) 775-5625 | **TEXAS** Fax: (972) 932-4795 | **NEVADA** Fax: (775) 972-1578

DIMENSIONS and SPECIFICATIONS

TOL ± .125”

Supplied with K-52 Faucet

ALL DIMENSIONS ARE TYPICAL

DI-1-5

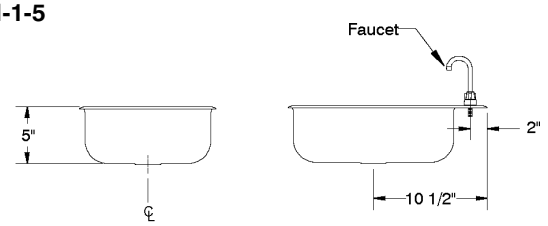

Approx. Wt. 12 lbs.

DI-1-5SP

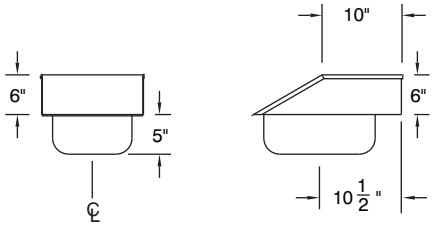

Approx. Wt. 16 lbs.

DI-1-10

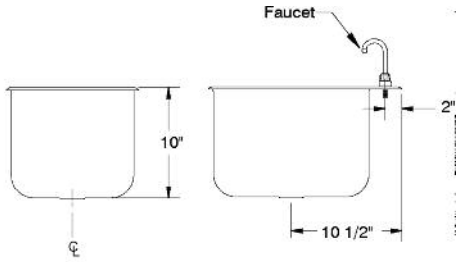

Approx. Wt. 14 lbs.

DI-1-10SP

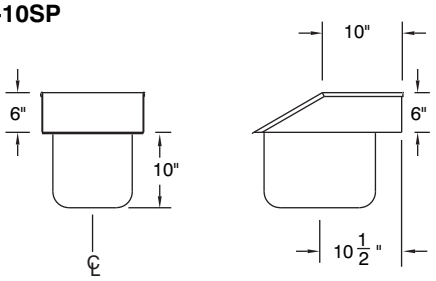

Approx. Wt. 18 lbs.

TOP VIEW FOR DI-1-5 & DI-1-10

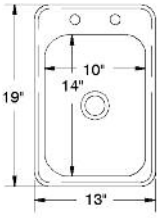

Cut-Out Size
12 1/4” x 18 1/4”
1 1/4” radius corners

TOP VIEW FOR DI-1-5SP & DI-1-10SP

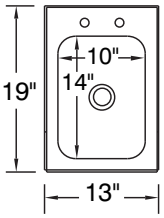

DI-1-25

Cut-Out Size
11 1/4” x 13 1/4”
1 1/4” radius corners

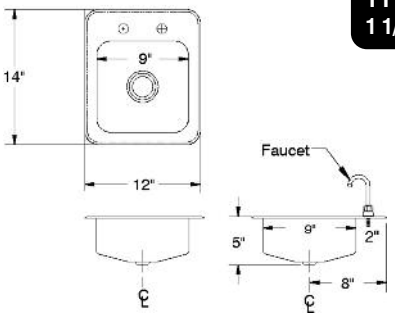

Approx. Wt. 8 lbs.

DI-1-35

Cut-Out Size
16 1/4” x 14 1/4”
1 1/4” radius corners

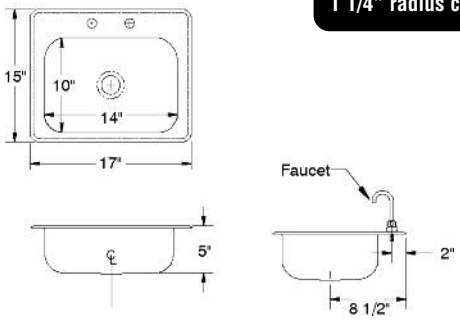

Approx. Wt. 10 lbs.

TYPICAL INSTALLATION

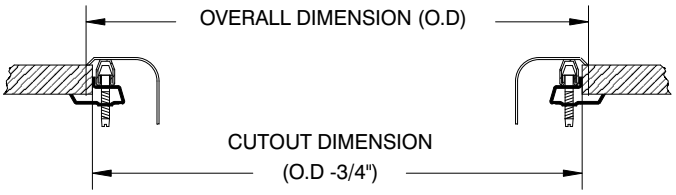

Cut-Out Size = L to R x F to B

ADVANCE TABCO
SMART FABRICATION™

200 Heartland Boulevard, Edgewood, NY 11717-8380

ADVANCE TABCO is constantly engaged in a program of improving our products. Therefore, we reserve the right to change specifications without prior notice.

© ADVANCE TABCO, JUNE 2012