STAINLESS STEEL

FABRICATED SERVICE & MOP SINKS

ADVANCE TABCO®
SMART FABRICATION™

9-OP-40DF Shown

9-OP-20 Shown

Notched Out Front Allows
Ease of Emptying Mop Bucket

9-OP-40 Shown

Fabricated Bowls are Welded
Together at the Seams

Item #: _____ ***Qty #:*** _____

Model #: _____

Project #: _____

FLOOR UNITS

FEATURES:

Floor mounted unit eliminates the need of lifting heavy containers.

Tile edge furnished on the rear.

Bowls rectangular in design for increased capacity.

CONSTRUCTION:

All TIG welded.

Welded areas blended to match adjacent surfaces and to a satin finish.

MATERIAL:

16 Gauge type “304" series stainless steel sink bowl.

18 Gauge type “304" series stainless steel sink apron.

STANDING UNITS

FEATURES:

Leg mounted design.

High back splash.

CONSTRUCTION:

All TIG welded.

Welded areas blended to match adjacent surfaces and to a satin finish.

MATERIAL:

Heavy gauge type “304" series stainless steel.

Conventional

8-OP-16

Economy

4-OP-18

16” HIGH SIDE & BACK SPLASHES FOR 9-OP SERIES MOP SINKS

16 Gauge, 300 Series Stainless Steel
Available with Back & Left Side,
Back & Right Side or Back & Both Sides
(Mounting Hardware Included)

MODEL	Fits Units:	Height Above Finished Floor (A.F.F.)
K-288LorR	9-OP-20	26”
	9-OP-40	32”
K-290LorR	9-OP-28	26”
	9-OP-48	32”
Splashes Available on All 3 Sides		
K-298	9-OP-20	26”
	9-OP-40	32”
K-299	9-OP-28	26”
	9-OP-48	32”

SERVICE & MOP SINK ACCESSORIES

MOP DRAINAGE TRAY

- 16 Gauge, 300 Series Stainless Steel
- Includes Cast 1/2” Drain & Plastic Hose
- Wall Mounted (Hardware not Included)
- 2” Tray Height with 6” Rear Splash (Overall Height)

MODEL	L x W x H	Approx. Wt.
K-243	32” x 4” x 6”	13 lbs.

FLOW RATE
9.6 GPM/
36.3 LPM

8” O.C.

K-240
SERVICE FAUCET

K-16 FLOOR MOP SINK REPLACEMENT DRAIN

K-242 MOP HANGER - 23” Wide

UTILITY SHELF - 8” WIDE

inches	mm	MODEL	Approx Wt	Approx Cubes
24”	610	K-245	12 lbs.	1
36”	914	K-246	15 lbs.	2

K-244 HOSE & HANGER

ADVANCE TABCO®
SMART FABRICATION™
www.advancetabco.com

Customer Service Available To Assist You 1-800-645-3166 8:30 am - 8:00 pm E.S.T.

Email Orders To: customer@advancetabco.com. For Smart Fabrication™ Quotes, Email To: smartfab@advancetabco.com or Fax To: 631-586-2933

NEW YORK	GEORGIA	TEXAS	NEVADA
Fax: (631) 242-6900	Fax: (770) 775-5625	Fax: (972) 932-4795	Fax: (775) 972-1578

DIMENSIONS

TOL Overall: ± .500"
Interior: ± .250"

ALL DIMENSIONS ARE TYPICAL

SUGGESTED INSTALLATION

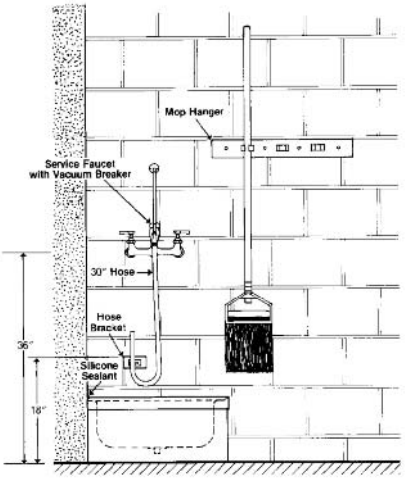

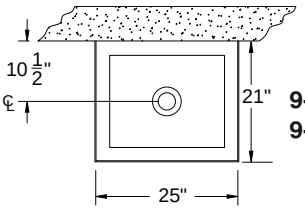

9-OP-20
9-OP-40

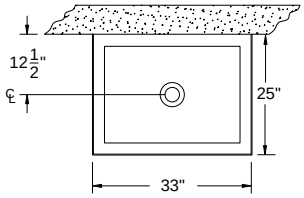

9-OP-28
9-OP-48

9-OP-20: 16" x 20" x 6" Bowl with 10" Overall Height. **Wt. 26 lbs.**
9-OP-28: 20" x 28" x 6" Bowl with 10" Overall Height. **Wt. 35 lbs.**
9-OP-40: 16" x 20" x12" Bowl with 16" Overall Height. **Wt. 45 lbs.**
9-OP-48: 20" x 28" x 12" Bowl with 16" Overall Height. **Wt. 63 lbs.**

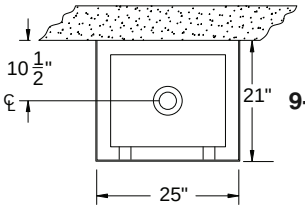

9-OP-40DF

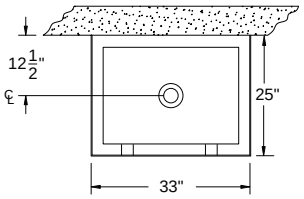

9-OP-48DF

9-OP-40DF: 16" x 20" x12" Bowl with 16" Overall Height. **Wt. 45 lbs.**
9-OP-48DF: 20" x 28" x 12" Bowl with 16" Overall Height. **Wt. 63 lbs.**

MOP SINK DRAIN ASSEMBLY

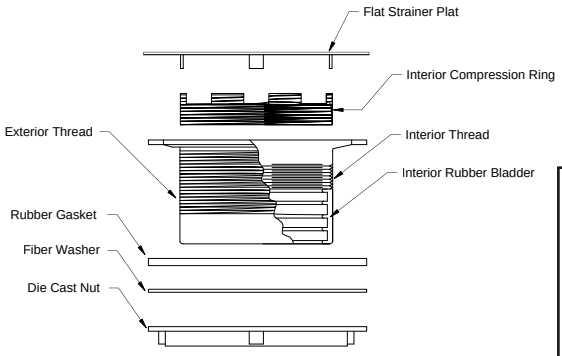

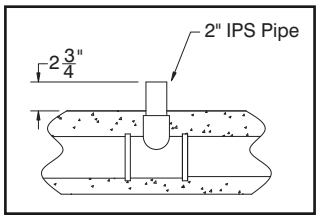

K-243 MOP DRAINAGE TRAY

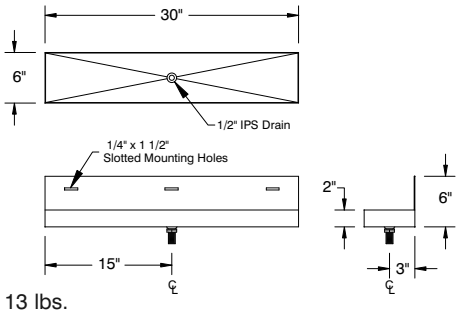

13 lbs.

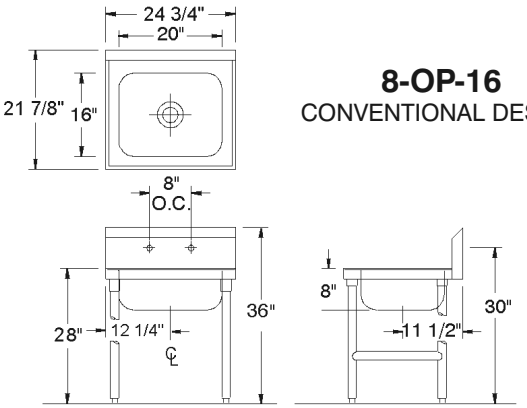

8-OP-16
CONVENTIONAL DESIGN

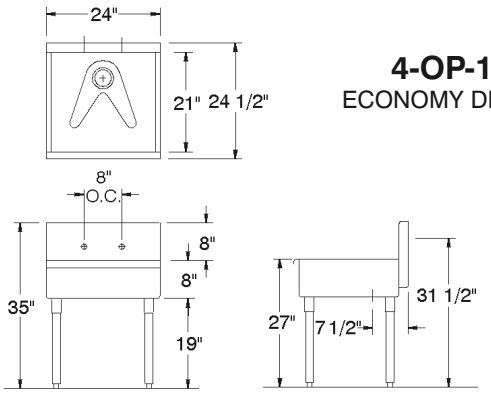

4-OP-18
ECONOMY DESIGN

1 1/2" IPS

ADVANCE TABCO
SMART FABRICATION

ADVANCE TABCO is constantly engaged in a program of improving our products. Therefore, we reserve the right to change specifications without prior notice.

200 Heartland Boulevard, Edgewood, NY 11717-8380
© ADVANCE TABCO, OCT 2012