Centaur™

Model# **MAC20, MAC30, MAC60 Planetary Mixers**

PROJECT NAME: _____ LOCATION: _____

ITEM: _____ MODEL: _____

20 Qt. Mixer
(Bench)

30 Qt. Mixer
(Floor)

60 Qt. Mixer
(Includes Bowl Truck)

Motor: Powerful motors with thermal overload protection (automatic reset).

Finish: NSF approved enamel gray paint.

Capacity: MAC20 - 20 quart bowl
MAC30 - 30 quart bowl
MAC60 - 60 quart bowl

Transmission: Fixed speed transmission is made of heat treated, hardened alloy, precision milled gears that operate the planetary action and provide high torque mixing power. The gears are packed in a long lasting grease, and all shafts are mounted in ball bearings.

Bowl Guard: Easy open and shut with guard handle. Made of high-quality stainless steel.

Safety Interlocks: The bowl guard and bowl lift lever are interlocked. The mixer will automatically shut down when the guard is opened or the bowl is lowered.

Standard Equipment:
Standard equipment includes #304 series stainless steel bowl, aluminum spiral dough hook, stainless steel wire whip, aluminum flat beater, stainless steel bowl guard, 15 minute timer and #12 attachment hub. A sturdy hand lever on the body column raises and lowers the bowl as well as locking in place at the top and bottom positions.

Cord: 6 ft. flexible three wire cord and ground plug.
Mixer Voltages:
MAC20 - 115V
MAC30 - 115V
MAC60 - 220V, Single Phase

Shipping Information:
Frieght Class: 85

MAC20 - Shipping Weight 270 lbs (122kg)
MAC30 - Shipping Weight 565 lbs (256kg)
MAC60 - Shipping Weight 795 lbs (360kg)

WARRANTY One-year parts and labor

FEATURES LIST

• Powerful motors	½ HP, MAC20
	1 HP, MAC30
	3 HP, MAC60
• Three fixed speeds	
• Gear driven, high torque transmission	
• 15 minute timer and side mounted controls	
• Non-slip rubber feet	
• Cast iron body	
• Thermal overload protection	
• Stainless steel, easy-to-open bowl guard with handle	
• Front mounted #12 hub for attachments	
• NSF approved enamal paint	

Standard Accessories

- Stainless steel bowl
- Flat beater (aluminum)
- Stainless steel wire whip
- Spiral dough hook (aluminum)

Specifications subject to change without notice

Approvals:

Centaur™

Model# **MAC20, MAC30, MAC60 Planetary Mixers**

Specifications

MAC20 MIXER

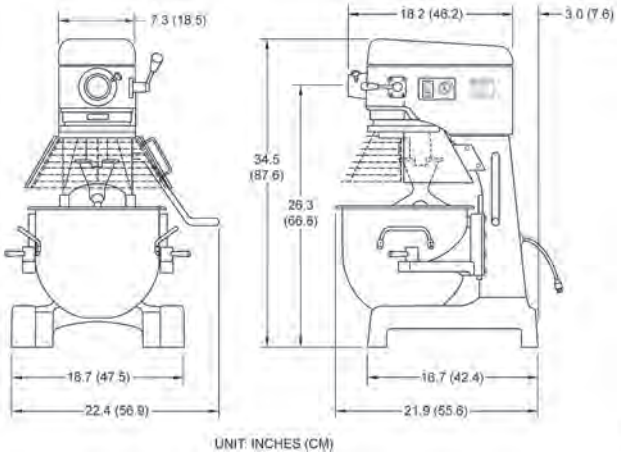

MAC30 MIXER

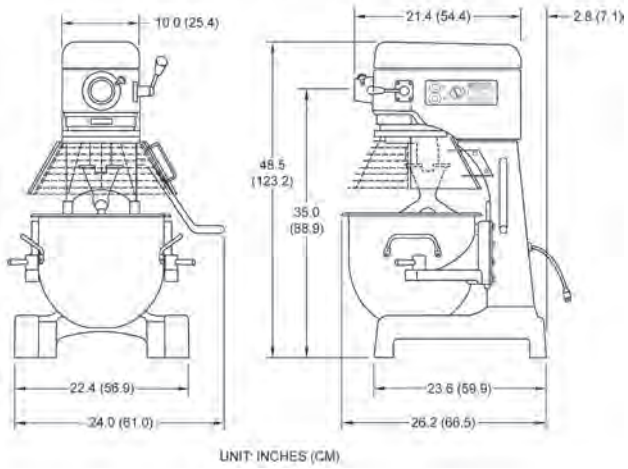

MAC60 MIXER

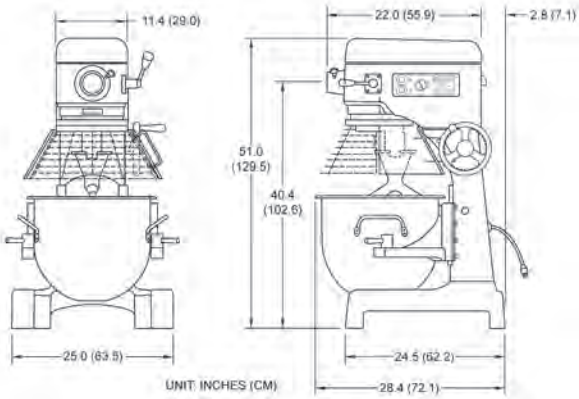

DIMENSIONAL DATA

MAC20	MAC30	MAC60
Capacity: 20 Quart bowl / mixing capacity	**Capacity:** 30 Quart bowl / mixing capacity	**Capacity** 60 Quart bowl / mixing capacity
Agitator Speeds (RPMS): Low 104 Intermediate 194 High 353	**Agitator Speeds (RPMS):** Low 92 Intermediate 164 High 317	**Agitator Speeds (RPMS):** Low 72 Intermediate 129 High 255
Attachment Speeds (RPMS): Low 59 Intermediate 110 High 201	**Attachment Speeds (RPMS):** Low 62 Intermediate 111 High 215	**Attachment Speeds (RPMS):** Low 60 Intermediate 108 High 197
Dimensions: Overall Length = 21.9" (55.6 cm) Overall Width = 22.4" (56.9 cm) Overall Height = 34.5" (87.6 cm)	**Dimensions:** Overall Length = 26.2" (66.5 cm) Overall Width = 24" (61 cm) Overall Height = 48.5" (123.2 cm)	**Dimensions:** Overall Length = 28.4" (72.1 cm) Overall Width = 25" (63.5 cm) Overall Height = 51" (129.5 cm)

Printed in U.S.A. 10-2010